Взято с сайта www.wit.ru

SUPERO®

SC846 CHASSIS SERIES

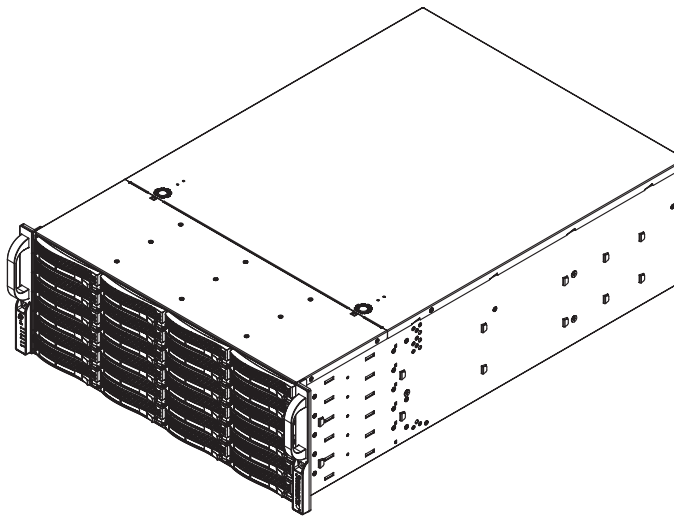

SC846TQ-R900B
SC846E1-R900B
SC846E1-R710B
SC846E2-R900B

USER'S MANUAL

1.0d

The information in this User's Manual has been carefully reviewed and is believed to be accurate. The vendor assumes no responsibility for any inaccuracies that may be contained in this document, makes no commitment to update or to keep current the information in this manual, or to notify any person or organization of the updates. **Please Note: For the most up-to-date version of this manual, please see our web site at www.supermicro.com.**

Super Micro Computer, Inc. ("Supermicro") reserves the right to make changes to the product described in this manual at any time and without notice. This product, including software, if any, and documentation may not, in whole or in part, be copied, photocopied, reproduced, translated or reduced to any medium or machine without prior written consent.

IN NO EVENT WILL SUPERMICRO BE LIABLE FOR DIRECT, INDIRECT, SPECIAL, INCIDENTAL, SPECULATIVE OR CONSEQUENTIAL DAMAGES ARISING FROM THE USE OR INABILITY TO USE THIS PRODUCT OR DOCUMENTATION, EVEN IF ADVISED OF THE POSSIBILITY OF SUCH DAMAGES. IN PARTICULAR, SUPERMICRO SHALL NOT HAVE LIABILITY FOR ANY HARDWARE, SOFTWARE, OR DATA STORED OR USED WITH THE PRODUCT, INCLUDING THE COSTS OF REPAIRING, REPLACING, INTEGRATING, INSTALLING OR RECOVERING SUCH HARDWARE, SOFTWARE, OR DATA.

Any disputes arising between manufacturer and customer shall be governed by the laws of Santa Clara County in the State of California, USA. The State of California, County of Santa Clara shall be the exclusive venue for the resolution of any such disputes. Super Micro's total liability for all claims will not exceed the price paid for the hardware product.

California Best Management Practices Regulations for Perchlorate Materials: This Perchlorate warning applies only to products containing CR (Manganese Dioxide) Lithium coin cells. "Perchlorate Material-special handling may apply. See www.dtsc.ca.gov/hazardouswaste/perchlorate"

WARNING: Handling of lead solder materials used in this product may expose you to lead, a chemical known to the State of California to cause birth defects and other reproductive harm.

Manual Revision 1.0d
Release Date: December 29, 2008

Unless you request and receive written permission from Super Micro Computer, Inc., you may not copy any part of this document.

Information in this document is subject to change without notice. Other products and companies referred to herein are trademarks or registered trademarks of their respective companies or mark holders.

Copyright © 2008 by Super Micro Computer, Inc.
All rights reserved.
Printed in the United States of America

Preface

About This Manual

This manual is written for professional system integrators and PC technicians. It provides information for the installation and use of the SC846 chassis. Installation and maintenance should be performed by experienced technicians only.

This manual lists compatible parts available when this document was published. Always refer to the our Web site for updates on supported parts and configurations.

Manual Organization

Chapter 1: Introduction

The first chapter provides a checklist of the main components included with this chassis and describes the main features of the SC846 chassis. This chapter also includes contact information.

Chapter 2: System Safety

This chapter lists warnings, precautions, and system safety. It recommended that you thoroughly familiarize yourself installing and servicing this chassis safety precautions.

Chapter 3: Chassis Components

Refer here for details on this chassis model including the fans, bays, airflow shields, and other components.

Chapter 4: System Interface

Refer to this chapter for details on the system interface, which includes the functions and information provided by the control panel on the chassis as well as other LEDs located throughout the system.

Chapter 5: Chassis Setup and Maintenance

Follow the procedures given in this chapter when installing, removing, or reconfiguring your chassis.

Chapter 6: Rack Installation

Refer to this chapter for detailed information on chassis rack installation. You should follow the procedures given in this chapter when installing, removing or reconfiguring your chassis into a rack environment.

This section lists compatible cables, power supply specifications, and compatible backplanes. Not all compatible backplanes are listed. Refer to our Web site for the latest compatible backplane information.

Appendix A: Hardware

This section provides information on cabling, and other hardware which is compatible with your chassis. For complete information on supported cables and hardware, refer to the Supermico Web site at www.supermicro.com.

Appendix B: Power Supply Specifications

This chapter lists the specifications of the power supply provided with your chassis. For additional information, refer to the Supermicro website at www.supermicro.com.

Appendix C: SAS-846TQ Backplane Specifications

This section contains detailed specifications on the backplane for the SC846TQ chassis systems. Additional information can be found on the Supermicro Web site at www.supermicro.com.

Appendix D: SAS-846EL Backplane Specifications

This section contains detailed specifications on the backplane for the SC846EL chassis systems. Additional information can be found on the Supermicro Web site at www.supermicro.com.

Table of Contents

Chapter 1 Introduction

1-1 Overview 1-1
1-2 Shipping List 1-1
Part Numbers 1-1
1-3 Where to get Replacement Components 1-2
1-4 Contacting Supermicro 1-3
1-5 Returning Merchandise for Service 1-4

Chapter 2 System Safety

2-1 Overview 2-1
2-2 Warnings and Precautions 2-1
2-3 Preparing for Setup 2-1
2-4 Electrical Safety Precautions 2-1
2-5 General Safety Precautions 2-3
2-6 System Safety 2-3

Chapter 3 System Interface

3-1 Overview 3-1
3-2 Control Panel Buttons 3-2
3-3 Control Panel LEDs 3-2
3-4 Drive Carrier LEDs 3-4
SAS/SATA Drives 3-4
SCSI Drives 3-4

Chapter 4 Chassis Setup and Maintenance

4-1 Overview 4-1
4-2 Removing the Chassis Cover 4-2
4-3 Installing Hard Drives 4-3
4-4 Installing the Motherboard 4-6
I/O Shield 4-6
Permanent and Optional Standoffs 4-7
Add-on Card/Expansion Slot Setup 4-9
4-5 Installing the Air Shroud 4-10
4-6 Checking the Server's Air Flow 4-11
4-7 System Fans 4-12
4-8 Power Supply 4-14
4-9 Changing the Power Distributor 4-17

4-10 Changing the CD-ROM, DVD-ROM, or Floppy Drive and HDD trays..... 4-19
4-11 Accessing the Backplane..... 4-22

Chapter 5 Rack Installation

5-1 Overview..... 5-1
5-2 Unpacking the System..... 5-1
5-3 Preparing for Setup..... 5-1
Choosing a Setup Location..... 5-1
Rack Precautions..... 5-2
General Server Precautions..... 5-2
Rack Mounting Considerations..... 5-3
Ambient Operating Temperature..... 5-3
Reduced Airflow..... 5-3
Mechanical Loading..... 5-3
Circuit Overloading..... 5-3
Reliable Ground..... 5-3
5-4 Rack Mounting Instructions..... 5-4
Rack Rails Assembly..... 5-4
Identifying the Inner Rack Rails..... 5-4

Appendix A SC846 Cables and Hardware

Appendix B SC846 Power Supply Specifications

Appendix C BPN-SAS-846TQ Backplane Specifications

Appendix D BPN-SAS-846EL Backplane Specifications

Notes

Chapter 1

Introduction

1-1 Overview

Supermicro's SC846 4U chassis features a unique and highly-optimized design. The chassis is equipped with high efficiency power supply. High-performance fans provide ample optimized cooling for FB-DIMM memory modules and twenty-four hot-swappable drive bays offer maximum storage capacity.

1-2 Shipping List

Part Numbers

Please visit the following link for the latest shiping lists and part numbers for your particular chassis model http://www.supermicro.com/

SC846 Chassis				
Model	**CPU**	**HDD**	**I/O Slots**	**Power Supply**
SC846STQ-R900B	DP Xeon	24x SAS/ SATA	7x FF	900W (Redundant)
SC846E1-R900B	DP Xeon	24x SAS	7x FF	900W (Redundant)
SC846E2-R900B	DP Xeon	24x SAS	7x FF	900W (Redundant)
SC946E1-R710B	DP Xeon	24x SAS	7x FF	710W (Redundant)

1-3 Where to get Replacement Components

Though not frequently, you may need replacement parts for your system. To ensure the highest level of professional service and technical support, we strongly recommend purchasing exclusively from our Supermicro Authorized Distributors/ System Integrators/Resellers. A list of Supermicro Authorized Distributors/System Integrators/Resellers can be found at: http://www.supermicro.com. Click the Where to Buy link.

1-4 Contacting Supermicro

Headquarters

Address:	Super Micro Computer, Inc.
	980 Rock Ave.
	San Jose, CA 95131 U.S.A.
Tel:	+1 (408) 503-8000
Fax:	+1 (408) 503-8008
Email:	marketing@supermicro.com (General Information)
	support@supermicro.com (Technical Support)
Web Site:	www.supermicro.com

Europe

Address:	Super Micro Computer B.V.
	Het Sterrenbeeld 28, 5215 ML
	's-Hertogenbosch, The Netherlands
Tel:	+31 (0) 73-6400390
Fax:	+31 (0) 73-6416525
Email:	sales@supermicro.nl (General Information)
	support@supermicro.nl (Technical Support)
	rma@supermicro.nl (Customer Support)

Asia-Pacific

Address:	Super Micro Computer, Inc.
	4F, No. 232-1, Liancheng Rd.
	Chung-Ho 235, Taipei County
	Taiwan, R.O.C.
Tel:	+886-(2) 8226-3990
Fax:	+886-(2) 8226-3991
Web Site:	www.supermicro.com.tw
Technical Support:	
Email:	support@supermicro.com.tw
Tel:	886-2-8226-1900

1-5 Returning Merchandise for Service

A receipt or copy of your invoice marked with the date of purchase is required before any warranty service will be rendered. You can obtain service by calling your vendor for a Returned Merchandise Authorization (RMA) number. When returning to the manufacturer, the RMA number should be prominently displayed on the outside of the shipping carton, and mailed prepaid or hand-carried. Shipping and handling charges will be applied for all orders that must be mailed when service is complete.

For faster service, RMA authorizations may be requested online (http://www.supermicro.com/support/rma/).

Whenever possible, repack the chassis in the original Supermicro carton, using the original packaging material. If these are no longer available, be sure to pack the chassis securely, using packaging material to surround the chassis so that it does not shift within the carton and become damaged during shipping.

This warranty only covers normal consumer use and does not cover damages incurred in shipping or from failure due to the alteration, misuse, abuse or improper maintenance of products.

During the warranty period, contact your distributor first for any product problems.

Chapter 2

System Safety

2-1 Overview

This chapter provides a quick setup checklist to get your chassis up and running. Following the steps in order given should enable you to have your chassis setup and operational within a minimal amount of time. This quick set up assumes that you are an experienced technician, famailiar with common concepts and terminology.

2-2 Warnings and Precautions

You should inspect the box the chassis was shipped in and note if it was damaged in any way. If the chassis itself shows damage, file a damage claim with carrier who delivered your system.

Decide on a suitable location for the rack unit that will hold that chassis. It should be situated in a clean, dust-free area that is well venilated. Avoid areas where heat, electrical noise and eletromagnetic fields are generated.

You will also need it placed near at least one grounded power outlet. When configured, the SC846 chassis includes one power supply. "R" models include a redundant power supply and require two grounded outlets.

2-3 Preparing for Setup

The SC846 chassis includes a set of rail assemblies, including mounting brackets and mounting screws you will need to install the systems into the rack. Please read this manual in its entirety before you begin the installation procedure.

2-4 Electrical Safety Precautions

Basic electrical safety precautions should be followed to protect yourself from harm and the SC846 from damage:

- Be aware of the locations of the power on/off switch on the chassis as well as the room's emergency power-off switch, disconnection switch or electrical outlet. If an electrical accident occurs, you can then quickly remove power from the system.

- Do not work alone when working with high voltage components.

- Power should always be disconnected from the system when removing or installing main system components, such as the serverboard, memory modules and the DVD-ROM and floppy drives (not necessary for hot swappable drives). When disconnecting power, you should first power down the system with the operating system and then unplug the power cords from all the power supply modules in the system.

- When working around exposed electrical circuits, another person who is familiar with the power-off controls should be nearby to switch off the power, if necessary.

- Use only one hand when working with powered-on electrical equipment. This is to avoid making a complete circuit, which will cause electrical shock. Use extreme caution when using metal tools, which can easily damage any electrical components or circuit boards they come into contact with.

- Do not use mats designed to decrease electrostatic discharge as protection from electrical shock. Instead, use rubber mats that have been specifically designed as electrical insulators.

- The power supply power cord must include a grounding plug and must be plugged into grounded electrical outlets.

- Serverboard battery: CAUTION - There is a danger of explosion if the onboard battery is installed upside down, which will reverse its polarities This battery must be replaced only with the same or an equivalent type recommended by the manufacturer. Dispose of used batteries according to the manufacturer's instructions.

- DVD-ROM laser: CAUTION - this server may have come equipped with a DVD-ROM drive. To prevent direct exposure to the laser beam and hazardous radiation exposure, do not open the enclosure or use the unit in any unconventional way.

2-5 General Safety Precautions

- Keep the area around the chassis clean and free of clutter.
- Place the chassis top cover and any system components that have been removed away from the system or on a table so that they won't accidentally be stepped on.
- While working on the system, do not wear loose clothing such as neckties and unbuttoned shirt sleeves, which can come into contact with electrical circuits or be pulled into a cooling fan.
- Remove any jewelry or metal objects from your body, which are excellent metal conductors that can create short circuits and harm you if they come into contact with printed circuit boards or areas where power is present.
- After accessing the inside of the system, close the system back up and secure it to the rack unit with the retention screws after ensuring that all connections have been made.

2-6 System Safety

Electrostatic discharge (ESD) is generated by two objects with different electrical charges coming into contact with each other. An electrical discharge is created to neutralize this difference, which can damage electronic components and printed circuit boards. The following measures are generally sufficient to neutralize this difference before contact is made to protect your equipment from ESD:

- Do not use mats designed to decrease electrostatic discharge as protection from electrical shock. Instead, use rubber mats that have been specifically designed as electrical insulators.
- Use a grounded wrist strap designed to prevent static discharge.
- Keep all components and printed circuit boards (PCBs) in their antistatic bags until ready for use.
- Touch a grounded metal object before removing any board from its antistatic bag.
- Do not let components or PCBs come into contact with your clothing, which may retain a charge even if you are wearing a wrist strap.

- Handle a board by its edges only; do not touch its components, peripheral chips, memory modules or contacts.
- When handling chips or modules, avoid touching their pins.
- Put the serverboard and peripherals back into their antistatic bags when not in use.
- For grounding purposes, make sure your computer chassis provides excellent conductivity between the power supply, the case, the mounting fasteners and the serverboard.

Chapter 3

System Interface

3-1 Overview

There are several LEDs on the control panel as well as others on the drive carriers to keep you constantly informed of the overall status of the system as well as the activity and health of specific components. Most SC846 models have two buttons on the chassis control panel: a reset button and a power on/off switch. This chapter explains the meanings of all LED indicators and the appropriate responses you may need to take.

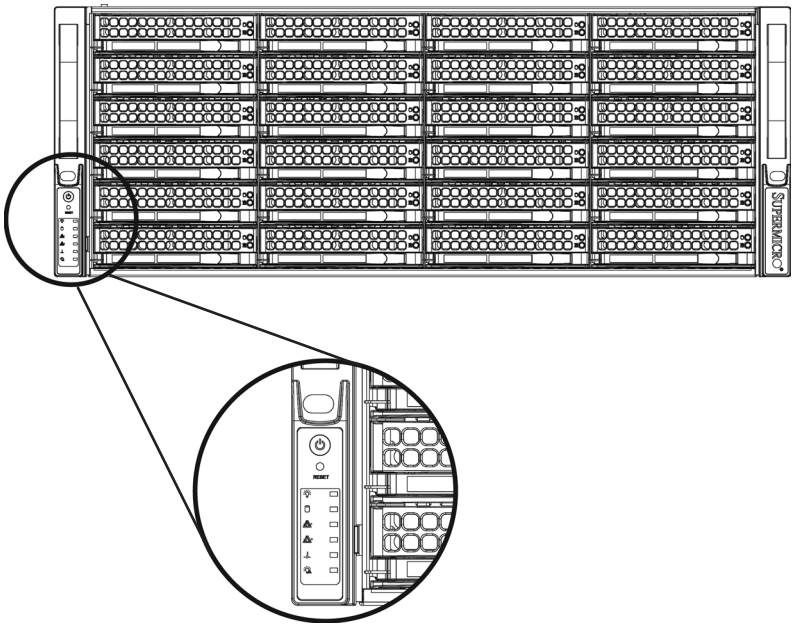

3-2 Control Panel Buttons

There are two push-buttons located on the front of the chassis. These are (in order from left to right) a reset button and a power on/off button.

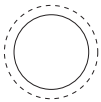

Reset: The reset button is used to reboot the system.

Power: The main power button is used to apply or remove power from the power supply to the server system. Turning off system power with this button removes the main power but keeps standby power supplied to the system. Therefore, you must unplug system before servicing.

3-3 Control Panel LEDs

The control panel located on the front of the SC846 chassis has five LEDs. These LEDs provide you with critical information related to different parts of the system. This section explains what each LED indicates when illuminated and any corrective action you may need to take.

Overheat/Fan Fail: When this LED flashes, it indicates a fan failure. When continuously on (not flashing) it indicates an overheat condition, which may be caused by cables obstructing the airflow in the system or the ambient room temperature being too warm. Check the routing of the cables and make sure all fans are present and operating normally. You should also check to make sure that the chassis covers are installed. Finally, verify that the heatsinks are installed properly. This LED will remain flashing or on as long as the overheat condition exists.

NIC2: Indicates network activity on GLAN2 when flashing.

NIC1: Indicates network activity on GLAN1 when flashing.

HDD: Indicates IDE channel activity. SAS/SATA drive, and/or DVD-ROM drive activity when flashing.

Power: Indicates power is being supplied to the system's power supply units. This LED should normally be illuminated when the system is operating.

Power Failure: When this LED flashes, it indicates a failure in the power supply.

3-4 Drive Carrier LEDs

Your chassis uses SAS/SATA.

SAS/SATA Drives

Each SAS/SATA drive carrier has two LEDs.

- **Green:** Each Serial ATA drive carrier has a green LED. When illuminated, this green LED (on the front of the SAS/SATA drive carrier) indicates drive activity. A connection to the SAS/SATA backplane enables this LED to blink on and off when that particular drive is being accessed.
- **Red:** The red LED to indicate an SAS/SATA drive failure. If one of the SAS/SATA drives fail, you should be notified by your system management software.

SCSI Drives

This chassis does not support SCSI drives at this time.

Chapter 4

Chassis Setup and Maintenance

4-1 Overview

This chapter covers the steps required to install components and perform maintenance on the chassis. The only tool you will need to install components and perform maintenance is a Phillips screwdriver. Print this chapter to use as a reference while setting up your chassis.

Review the warnings and precautions listed in the manual before setting up or servicing this chassis. These include information in Chapter 2: System Safety and the warning/precautions listed in the setup instructions.

4-2 Removing the Chassis Cover

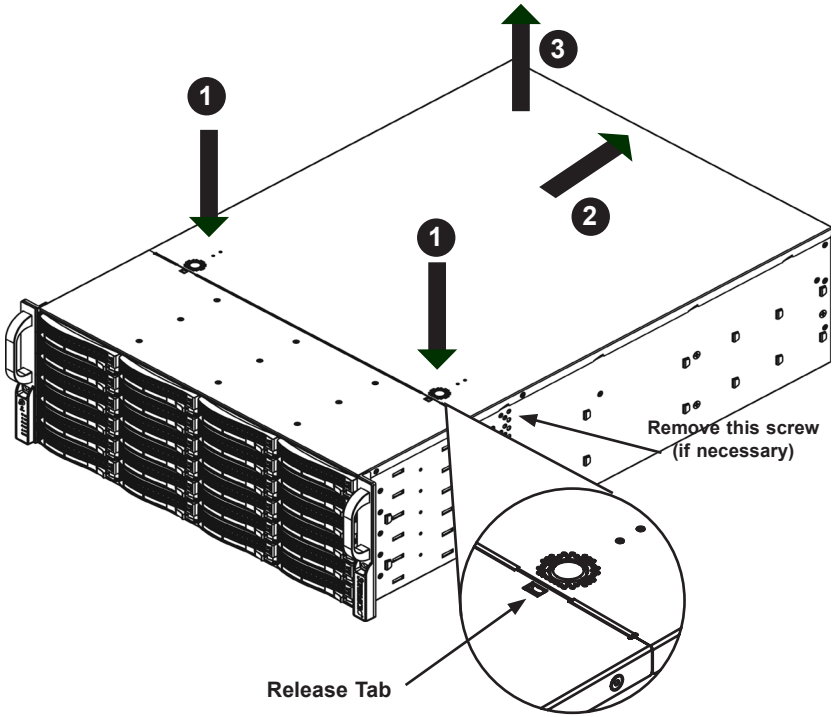

Figure 4-1: Removing the Chassis Cover

Removing the Chassis Cover

1. Press the release tabs to remove the cover from the locked position. Press both tabs at the same time.

2. Once the top cover is released from the locked position, slide the cover toward the rear of the chassis.

3. Lift the cover off the chassis.

Warning: Except for short periods of time, do NOT operate the server without the cover in place. The chassis cover must be in place to allow proper airflow and prevent overheating.

4-3 Installing Hard Drives

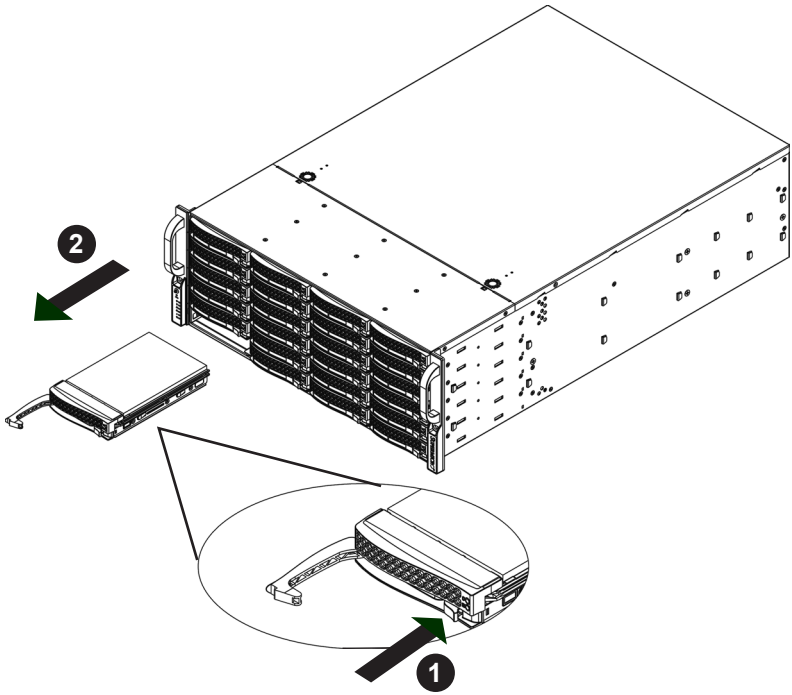

Figure 4-2: Removing Hard Drive

Removing Hard Drive Trays from the Chassis

1. Press the release button on the drive tray. This extends the drive bay handle.
2. Use the handle to pull the drive out of the chassis.

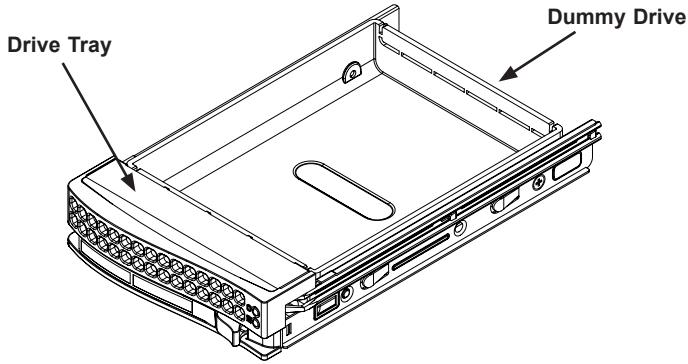

Figure 4-3: Chassis Drive Tray

The drives are mounted in drive trays to simplify their installation and removal from the chassis. These trays also help promote proper airflow for the drive bays.

Warning: Except for short periods of time (swapping hard drives), do not operate the server with the hard drives empty.

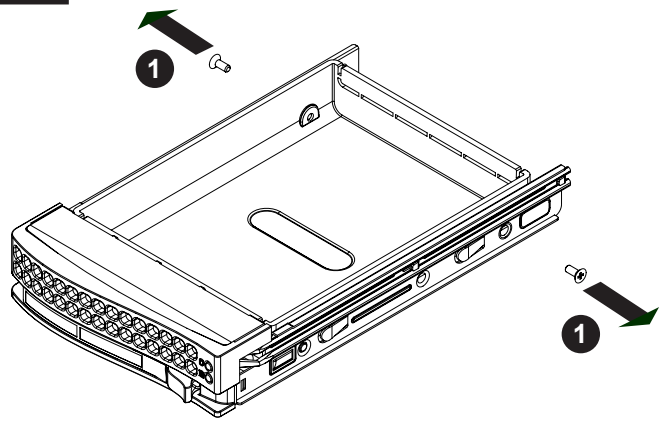

Figure 4-4: Removing Dummy Drive from Tray

Installing a Hard Drive to the Hard Drive Tray

1. Remove the two screws securing the dummy drive to the drive tray and remove the dummy drive.Place the hard drive tray on a flat surface such as a desk, table or work bench.

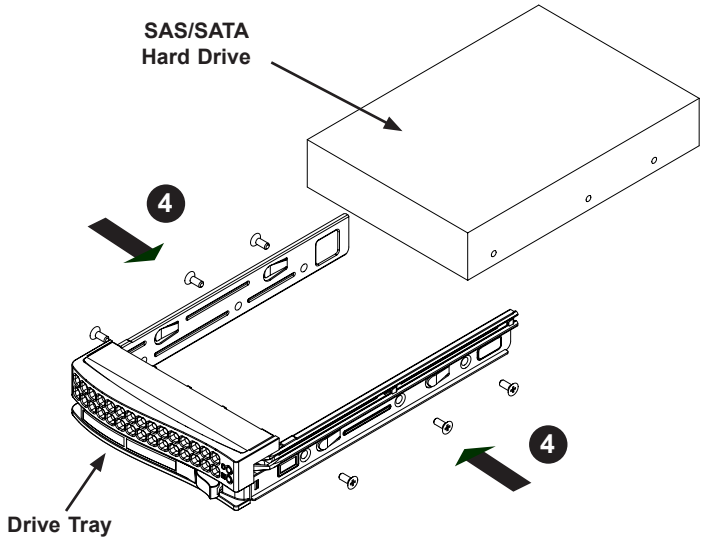

Figure 4-5: Installing the Hard Drive into the Tray

2. Slide the hard drive into the tray with the printed circuit board side facing down.

3. Carefully align the mounting holes in both the drive tray and the hard drive.

4. Secure the hard drive to the tray using six screws.

5. Replace the drive tray into the chassis. Make sure to close the drive tray handle to lock the drive tray into place.

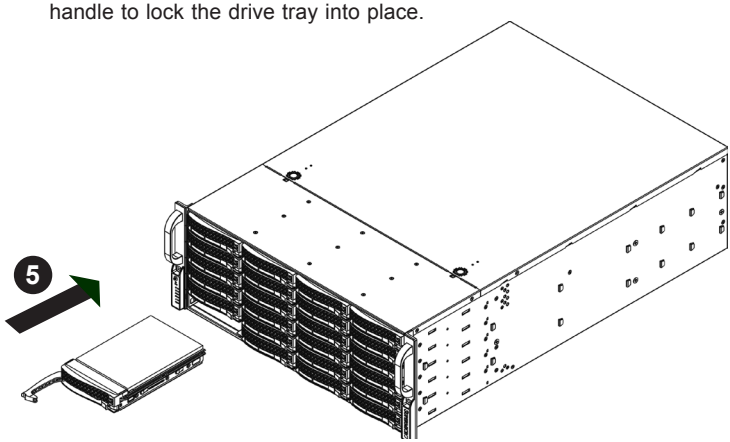

Figure 4-6: Installing the Hard Drive

4-4 Installing the Motherboard

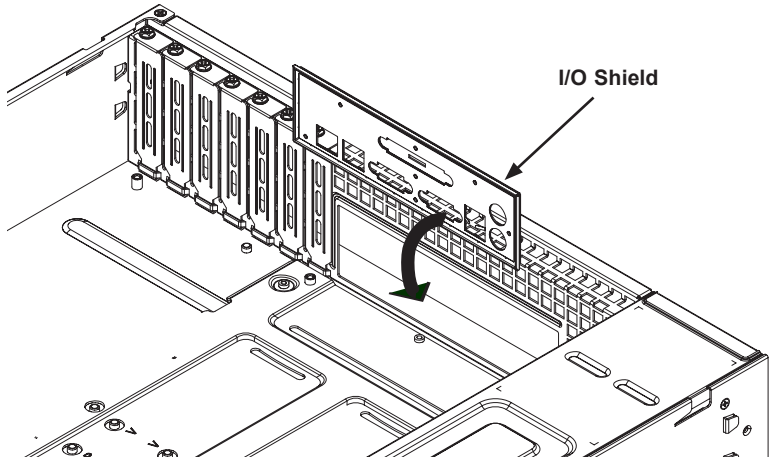

Figure 4-7: I/O Shield Placement

I/O Shield

The I/O shield holds the motherboard ports in place. Install the I/O shield before you install the motherboard.

Installing the I/O Shield

1. Review the documentation that came with your motherboard. Become familiar with component placement, requirements, and precautions.
2. Open the chassis cover.
3. With the illustrations facing the outside of the chassis, place the shield into the space provided.
4. Once installed, the motherboard will hold the I/O shield in place.

Permanent and Optional Standoffs

Standoffs prevent short circuits by securing space between the motherboard and the chassis surface. The SC846 chassis includes permanent standoffs in locations used by most motherboards. These standoffs accept the rounded Phillips head screws included in the SC846 accessories packaging.

Some motherboards require additional screws for heatsinks, general components and/or non-standard security. Optional standoffs are included to these motherboards. To use an optional standoff, you must place the hexagonal screw through the bottom the chassis and secure the screw with the hexagon nut (rounded side up).

M/B standoff
6-32 to 6-32

Figure 4-8: Chassis Standoffs

Installing the Motherboard

1. Review the documentation that came with your motherboard. Become familiar with component placement, requirements, precautions, and cable connections.

2. Open the chassis cover.

3. As required by your motherboard, install standoffs in any areas that do not have a permanent standoff. To do this:

   A. Place a hexagonal standoff screw through the bottom the chassis.

   B. Secure the screw with the hexagon nut (rounded side up).

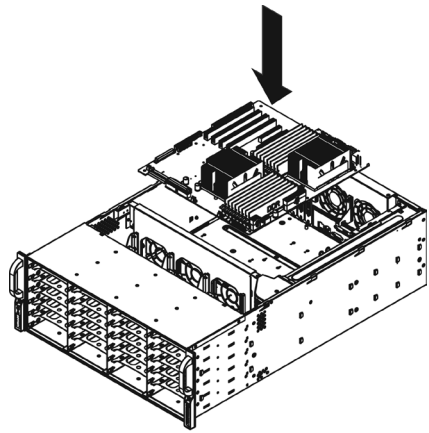

Figure 4-9: Motherboard Installation

4. Lay the motherboard on the chassis aligning the permanent and optional standoffs

5. Secure the motherboard to the chassis using the rounded, Phillips head screws.

6. Secure the CPU(s), heatsinks, and other components to the motherboard as described in the motherboard documentation.

7. Connect the cables between the motherboard, backplane, chassis, front panel, and power supply, as needed. Also, the fans may be temporarily removed to allow access to the backplane ports.

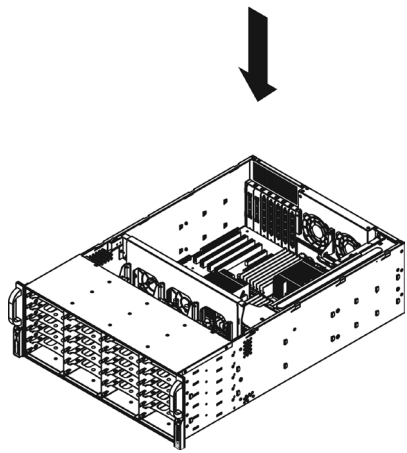

Figure 4-10: Secure the Motherboard to the Chassis

Add-on Card/Expansion Slot Setup

Your SC846 chassis includes I/O slots for add-on cards and expansion cards.

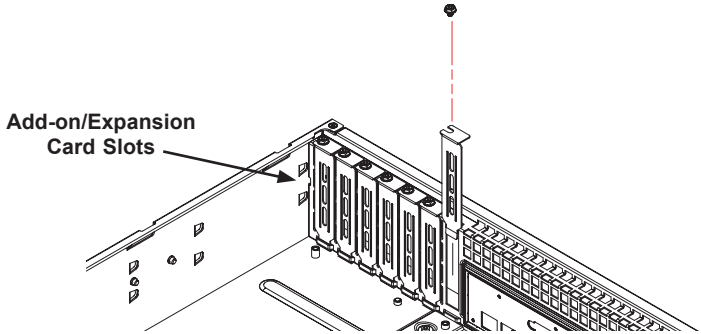

Figure 4-11: Installing Add-on and Expansion Cards

The SC846 chassis includes slots for add-on cards and expansion cards.

Installing Add-on and Expansion Cards in the SC846 Chassis:

1. Disconnect the power supply, lay the chassis on a flat surface, and open the chassis cover.

2. Remove the screw holding the cover in place for each add-on/expansion card slot you want to use. Keep this screw for later use.

3. Connect the add-on cards and/or expansion cards to the mother board.

4. Secure each card to the chassis using the card's L bracket and the previously removed screw.

4-5 Installing the Air Shroud

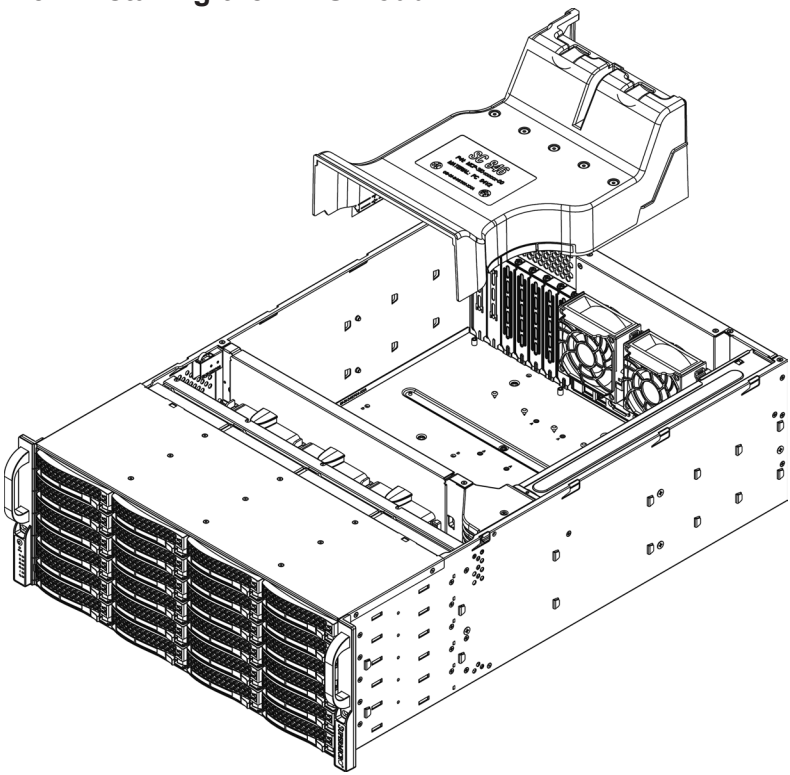

Figure 4-12: Air Shroud for SC846LP Chassis

Air shrouds concentrate airflow to maximize fan efficiency. The SC846 chassis air shroud does not require screws to set up

Installing the Air Shroud

1. Confirm that your air shroud matches your chassis model. Each shroud is labeled SC846LP, SC846RC, or SC846U,

Place air shroud in the chassis. The air shroud fits behind the two fans closest to the power supply. .

4-6 Checking the Server's Air Flow

Checking the Air Flow

1. Make sure there are no objects to obstruct airflow in and out of the server. In addition, if you are using a front bezel, make sure the bezel's filter is replaced periodically.

2. Do not operate the server without drives or drive trays in the drive bays. Use only recommended server parts.

3. Make sure no wires or foreign objects obstruct air flow through the chassis. Pull all excess cabling out of the airflow path or use shorter cables.

The control panel LEDs inform you of system status. See “Chapter 3: System Interface” for details on the LEDs and the control panel buttons.

In most cases, the chassis power supply and fans are pre-installed. If you need to install fans continue to the Systems Fan section of this chapter. If the chassis will be installed into a rack, continue to the next chapter for rack installation instructions

4-7 System Fans

Three heavy duty fans provide cooling for the chassis. These fans circulate air through the chassis as a means of lowering the chassis internal temperature.

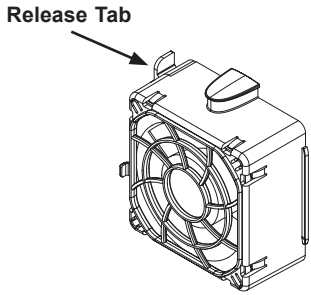

Figure 4-13: Front System Fan

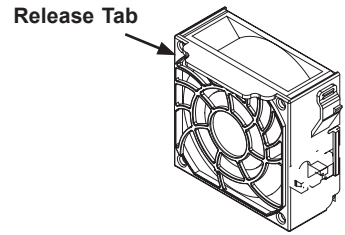

Figure 4-14: Rear System Fan

Replacing a System Fan

1. If necessary, open the chassis while the power is running to determine which fan has failed. (Never run the server for an extended period of time with the chassis open.)

2. Turn off the power to the system and unplug the system from the outlet.

3. Remove the failed fan's power cord from the serverboard.

4. Press the fan release tab to lift the failed fan from the chassis and pull it completely from the chassis.

5. Place the new fan into the vacant space in the housing while making sure the arrows on the top of the fan (indicating air direction) point in the same direction as the arrows on the other fans.

6. Power up the system and check that the fan is working properly before replacing the chassis cover.

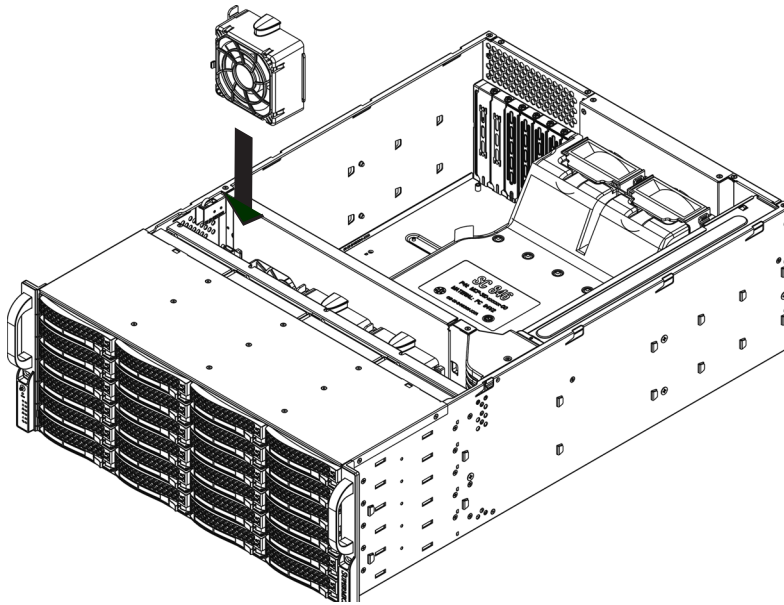

Figure 4-15: Placing the Front System Fan

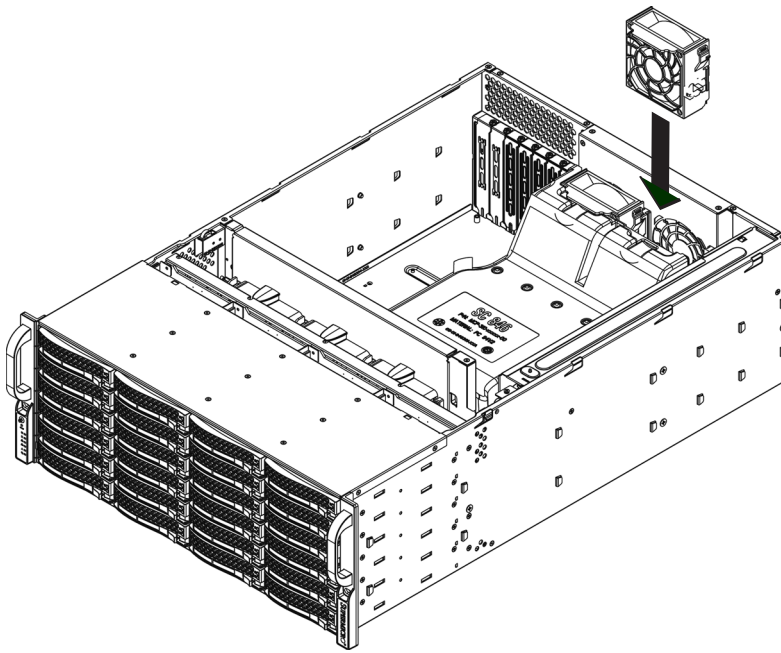

Figure 4-16: Placing the Rear System Fan

4-8 Power Supply

The SC846 Chassis has either a 710 Watt or a 900 Watt, high-efficiency redundant power supply. This power supply is auto-switching capable. This enables it to automatically sense and operate at a 100v to 240v input voltage. An amber light will be illuminated on the power supply when the power is off. An illuminated green light indicates that the power supply is operating.

Redundant power supplies are hot-swappable, and can be changed without powering down the system. New units can be ordered directly from Supermicro (see contact information in the Preface).

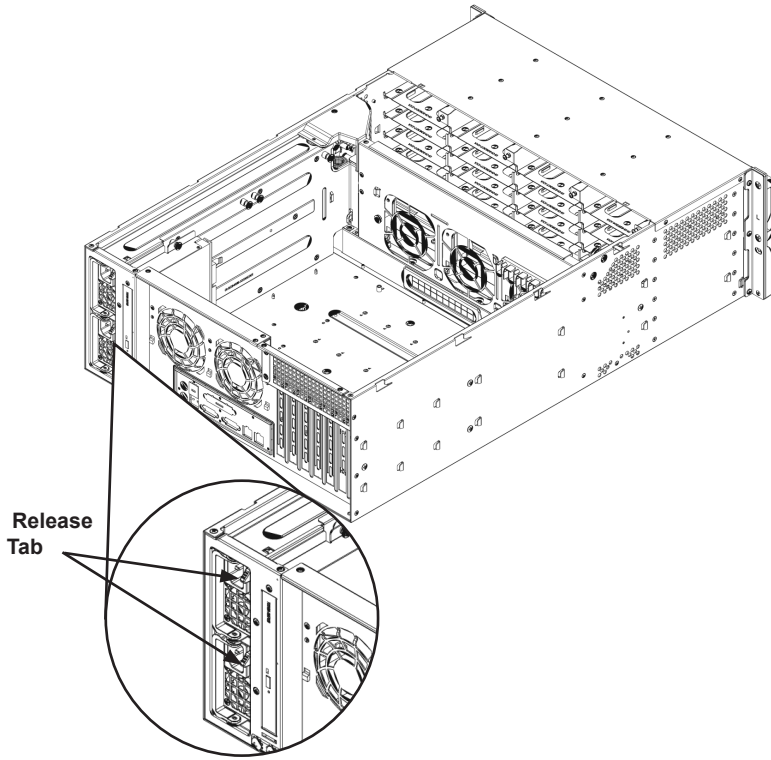

Figure 4-17: Power Supply Release Tab

Changing the Power Supply:

1. If your chassis includes a redundant power supply (at least two power modules), you can leave the server running and remove only one power supply. If your server has only one power supply, you must power down the server and unplug the power cord.

2. Push the release tab (on the back of the power supply) as illustrated.

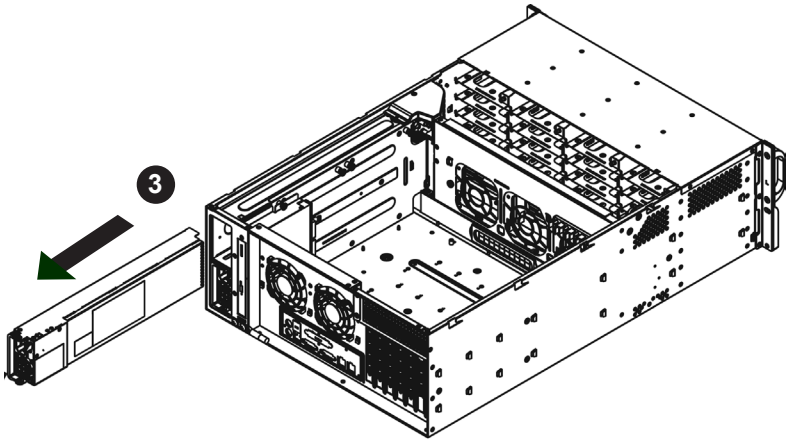

Figure 4-18: Removing the Power Supply

3. Pull the power supply out using the handle provided.

4. Replace the failed power module with the same model.

5. Push the new power supply module into the power bay until you hear a click.

6. Plug the AC power cord back into the module and power up the server.

4-9 Changing the Power Distributor

Server chassis above 2U require a power distributor. The power distributor provides failover and power supply redundancy. In the unlikely event you must change the power distributor, do following:

Changing the Power Distributor

1. Power down the server and remove the plug from the wall socket or power strip.

2. Remove all cable connections to the power supply from the motherboard, backplane, and other components. Also, remove both power supplies.

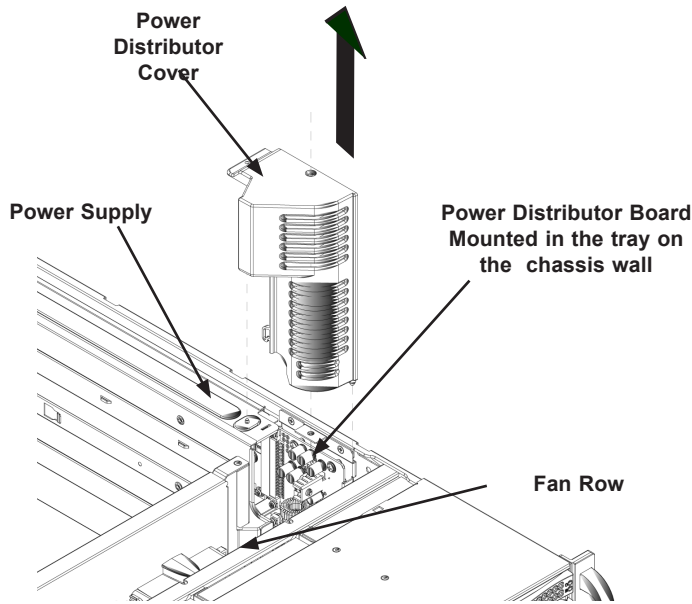

Figure 4-19: Removing the Power Distributor Cover

3. Locate the power distributor between the power supply and the fan row.
4. Remove the two screws securing the power distributor housing to the chassis wall
5. Remove the three screws securing the power distributor to the housing.
6. Gently pull the power distributor and houseing from the chassis. Carefully guide all the cables through the power distributor housing.
7. Remove the power distributor from the housing.
8. Slide the new power distributor module into the power distributor housing. Make that you slide the cables through the bottom of the housing.
9. Reconnect all the power cables, replace the power supply, and insert the plug into the wall.

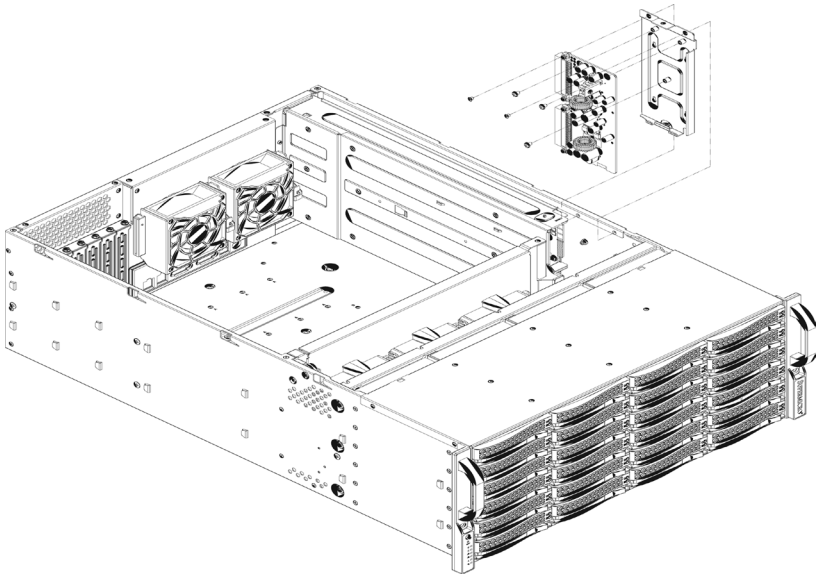

Figure 4-20: Removing the Power Distributor and Housing

4-10 Changing the CD-ROM, DVD-ROM, or Floppy Drive and HDD trays

The SC846 chassis supports the following drive configuration options:

Options	Position A	Position B	Position C
Option One	Floppy, DVD or CD-ROM drive	Not available	Not available
Option Two	Not available	3.5" fixed hard drive	3.5" fixed hard drive
Option Three	Floppy, DVD or CD-ROM drive	Not available	Open for later use
Option Four	Open for later use if no drive is in position B	Open for later use if no drive is in position A	3.5" fixed hard drive

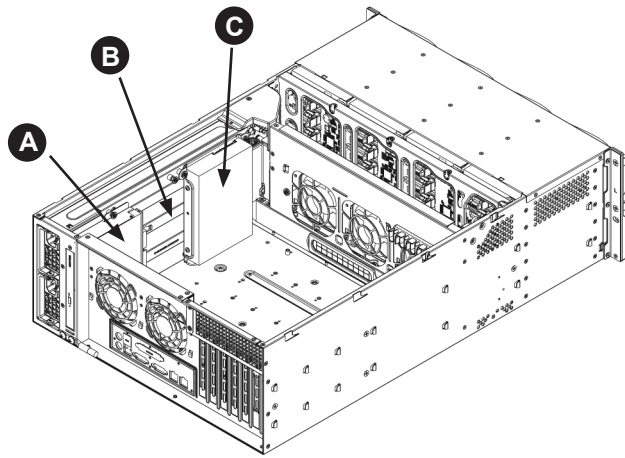

Figure 4-21: Drive Location Options

After selecting one of the drive configuration options listed above, use the following instructions to install the drives and their trays into the chassis.

Changing Drive Trays

1. Power down and unplug the system from the outlet.
2. Remove the chassis cover.
3. Disconnect the power and data cables from the drive to other chassis components including the motherboard and backplane.

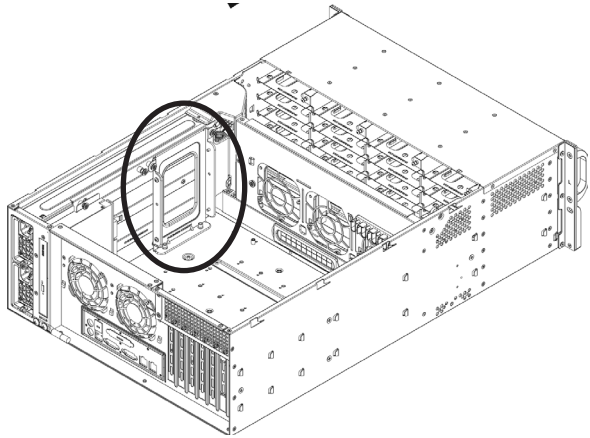

Figure 4-22: HDD Tray

4. Unscrew the four screws (6-32) holding the drive into the HDD tray.and set them aside. These will be needed later to mount the replacement drive into the HDD tray. Lift the drive tray up and out of the chassis.

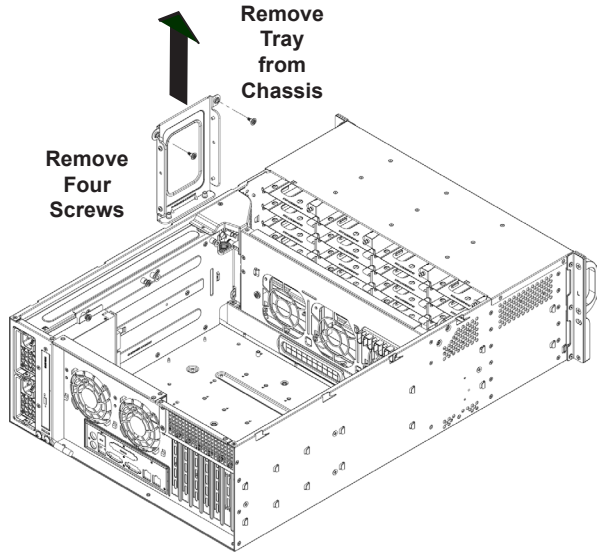

Figure 4-23: Remove the HDD Tray

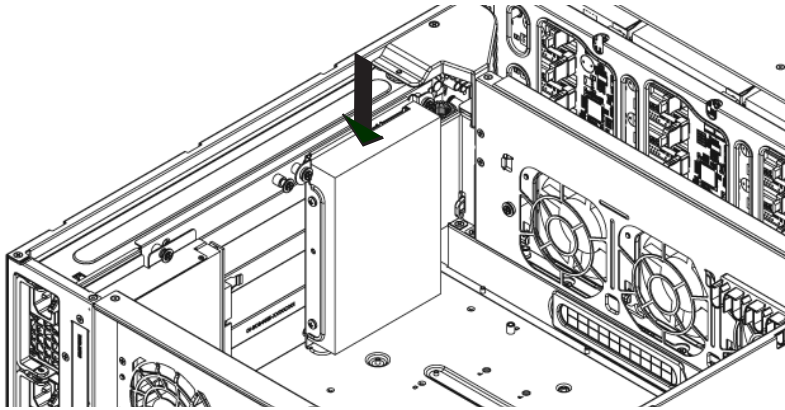

Figure 4-24: Replacement Drive and Tray Installed in the Chassis

Note the locations of the CD-ROM and DVD-ROM and the space for floppy drives in the beginning of this section. Determine which configuration option to use in the chassis before continuing.

Installing the Hard Drive

1. Carefully remove the drive from the HDD tray.

2. If necessary, also unscrew the four screws and mylar washers holding the drive tray to the chassis, and set them aside for later use when mounting the replacement HDD tray.

3. Remove the drive tray from the chassis.

4. Install the replacement HDD into the replacement drive tray using the four screws previously set aside.

5. Lower the replacement drive and tray into the chassis, carefully aligning the thru holes in the drive tray with the holes in the chassis.

6. Using the four drive tray screws previously put aside, install the replacement drive and drive tray into the chassis.

4-11 Accessing the Backplane

The SC846 chassis backplane is located behind the hard drives and in front of the front system fans. In order to change jumper settings on the backplane, it may be necessary to remove the backplane from the chassis.

Removing the Backplane

1. Power down and unplug the system from any power source.
2. Remove the chassis cover.
3. Disconnect the cabling to the backplane.
4. Remove the three upper screws securing backplane housing to the chassis and set these aside for later use.

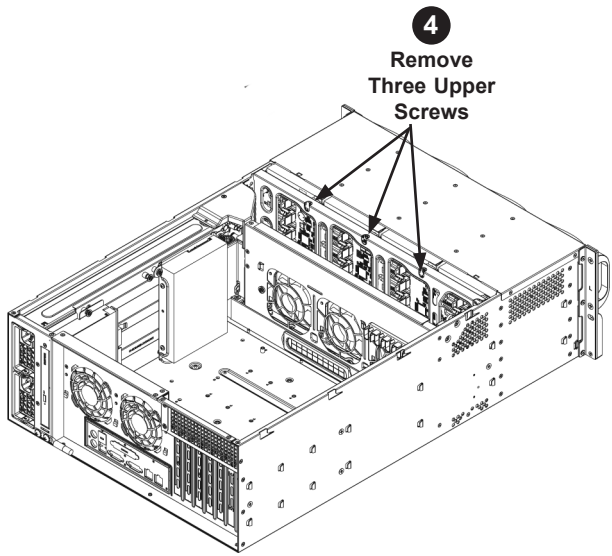

Figure 4-25: Removing the Upper Backplane Housing Screws

5. Remove the four lower screws securing the backplane housing to the chassis floor and set these aside for later use.

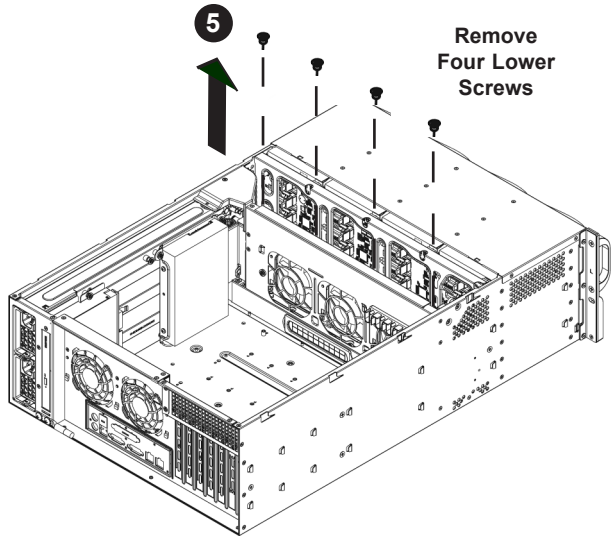

Figure 4-26: Removing the Lower Backplane Housing Screws

6. Gently ease the backplane up and out of the chassis.

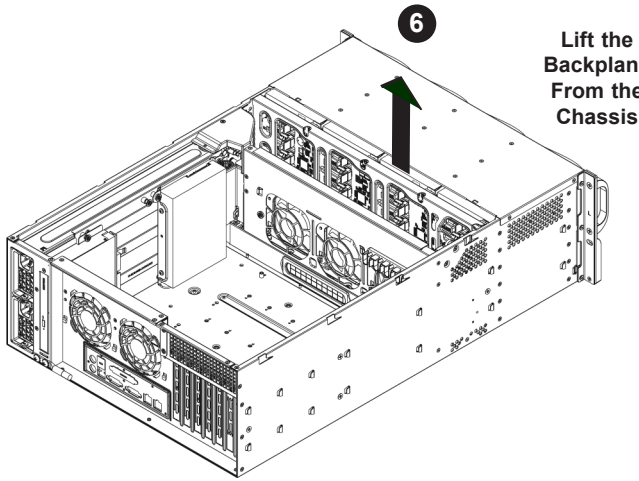

Figure 4-27: Removing the Backplane from the Chassis

Installing the Backplane

1. Gently slide the backplane and its housing back into position in the chassis.

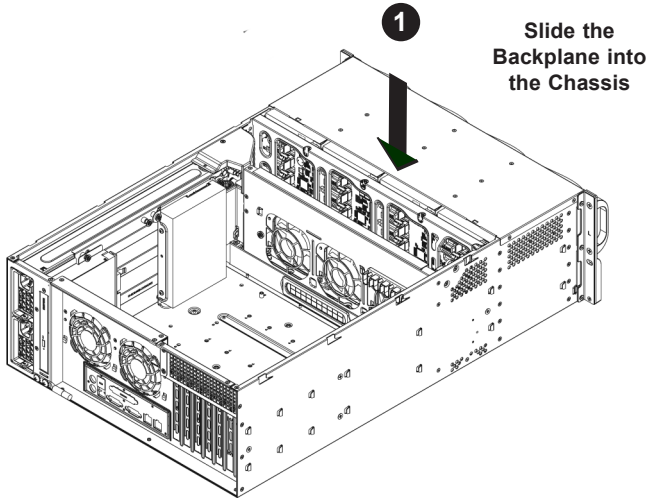

Figure 4-28: Replacing the Backplane in the Chassis

2. Replace the four lower screws which secure the backplane housing to the chassis floor.

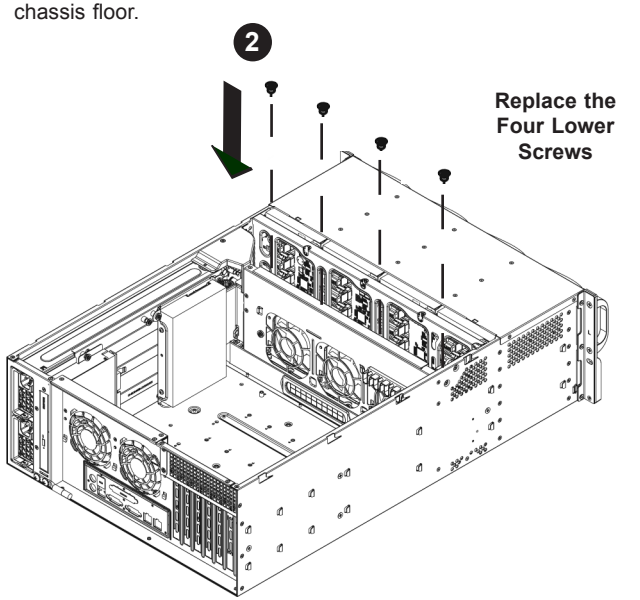

Figure 4-29: Replacing the Four Lower Screws

3. Replace the three upper screws which secure the backplane housing to the chassis.

4. Reconnect the cabling to the backplane.

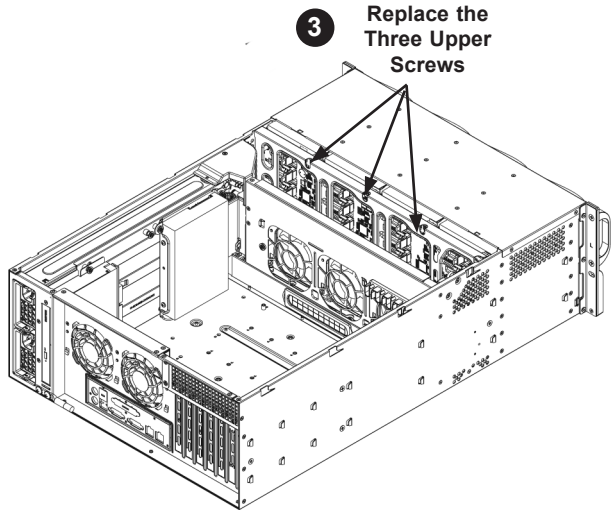

Figure 4-30: Replacing the Three Upper Screws

Notes

Chapter 5

Rack Installation

5-1 Overview

This chapter provides a quick setup checklist to get your chassis up and running. Following these steps in the order given should enable you to have the system operational within a minimum amount of time.

5-2 Unpacking the System

You should inspect the box the chassis was shipped in and note if it was damaged in any way. If the chassis itself shows damage you should file a damage claim with the carrier who delivered it.

Decide on a suitable location for the rack unit that will hold your chassis. It should be situated in a clean, dust-free area that is well ventilated. Avoid areas where heat, electrical noise and electromagnetic fields are generated. You will also need it placed near a grounded power outlet. Be sure to read the Rack and Server Precautions in the next section.

5-3 Preparing for Setup

The box your chassis was shipped in should include two sets of rail assemblies, two rail mounting brackets and the mounting screws you will need to install the system into the rack. Read this section in its entirety before you begin the installation procedure outlined in the sections that follow.

Choosing a Setup Location

- Leave enough clearance in front of the rack to enable you to open the front door completely (~25 inches).
- Leave approximately 30 inches of clearance in the back of the rack to allow for sufficient airflow and ease in servicing.

Warnings and Precautions!

- This product is for installation only in a Restricted Access Location (dedicated equipment rooms, service closets and the like).

Rack Precautions

- Ensure that the leveling jacks on the bottom of the rack are fully extended to the floor with the full weight of the rack resting on them.
- In single rack installation, stabilizers should be attached to the rack.
- In multiple rack installations, the racks should be coupled together.
- Always make sure the rack is stable before extending a component from the rack.
- You should extend only one component at a time - extending two or more simultaneously may cause the rack to become unstable.

General Server Precautions

- Review the electrical and general safety precautions that came with the components you are adding to your chassis.
- Determine the placement of each component in the rack *before* you install the rails.
- Install the heaviest server components on the bottom of the rack first, and then work up.
- Use a regulating uninterruptible power supply (UPS) to protect the server from power surges, voltage spikes and to keep your system operating in case of a power failure.
- Allow the hot plug hard drives and power supply modules to cool before touching them.

- Always keep the rack's front door and all panels and components on the servers closed when not servicing to maintain proper cooling.

Rack Mounting Considerations

Ambient Operating Temperature

If installed in a closed or multi-unit rack assembly, the ambient operating temperature of the rack environment may be greater than the ambient temperature of the room. Therefore, consideration should be given to installing the equipment in an environment compatible with the manufacturer's maximum rated ambient temperature (Tmra).

Reduced Airflow

Equipment should be mounted into a rack so that the amount of airflow required for safe operation is not compromised.

Mechanical Loading

Equipment should be mounted into a rack so that a hazardous condition does not arise due to uneven mechanical loading.

Circuit Overloading

Consideration should be given to the connection of the equipment to the power supply circuitry and the effect that any possible overloading of circuits might have on overcurrent protection and power supply wiring. Appropriate consideration of equipment nameplate ratings should be used when addressing this concern.

Reliable Ground

A reliable ground must be maintained at all times. To ensure this, the rack itself should be grounded. Particular attention should be given to power supply connections other than the direct connections to the branch circuit (i.e. the use of power strips, etc.).

5-4 Rack Mounting Instructions

Rack Rails Assembly

This section provides information on installing the SC846 chassis into a rack unit with the rails provided. There are a variety of rack units on the market, which may mean that the assembly procedure will differ slightly. You should also refer to the installation instructions that came with the rack unit you are using.

NOTE: This rail will fit a rack between 26" and 33.5" deep.

Identifying the Inner Rack Rails

The chassis package includes a rack rail assembly in the rack mounting kit. Each assembly consists of an inner rail that secures to the chassis and an outer rail that is attached directly to the rack.

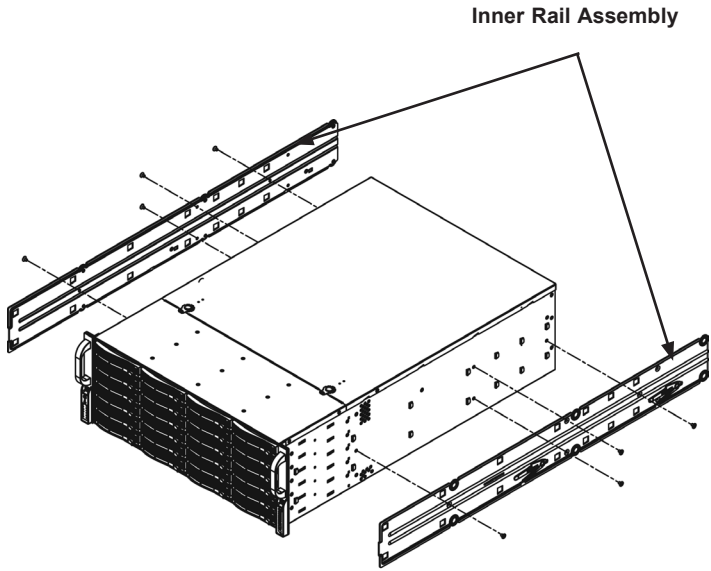

Figure 5-1: Identifying the Rack Rails

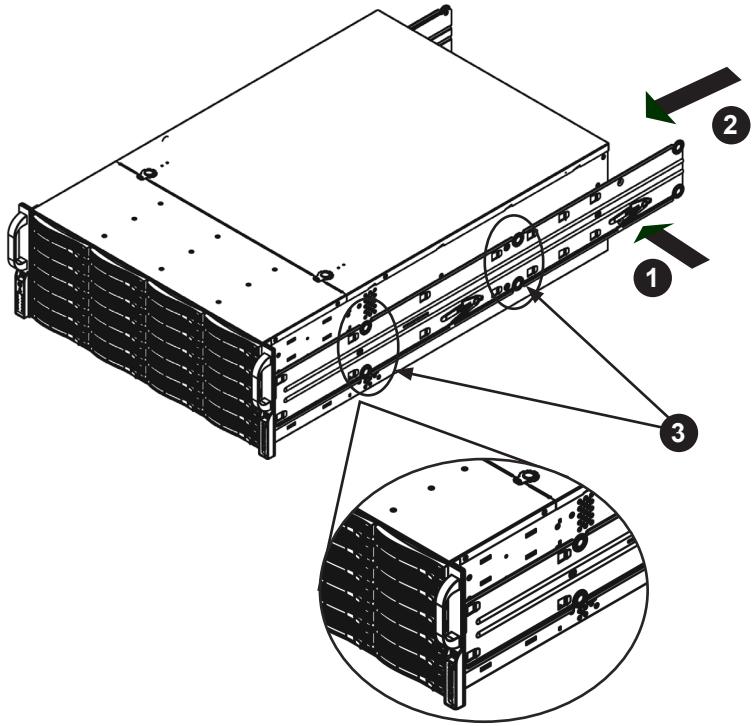

Figure 5-2: Installing the Rails

Installing the Inner Rails on the Chassis

Installing the Inner Rails

1. Place the inner rails on the side of the chassis aligning the hooks of the chassis with the inner rail holes. Make sure the rail faces "outward" so that it will fit with the rack's mounting bracket.

2. Slide the rail toward the front of the chassis.

3. Secure the chassis with 4 screws as illustrated.

4. Repeat steps 1-3 for the other inner rack rail.

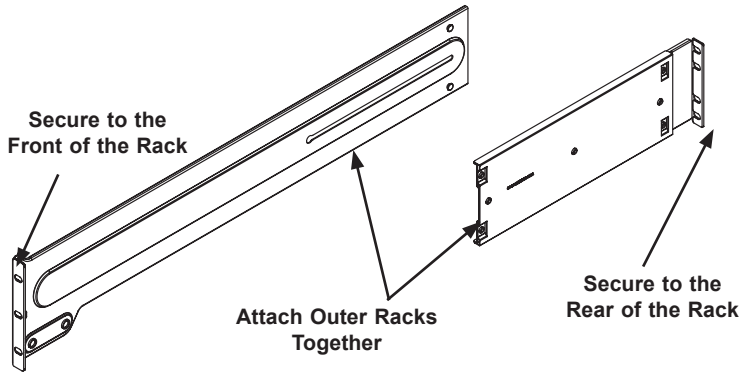

Figure 5-3: Assembling the Outer Rails

Installing the Outer Rails onto a Rack

Installing the Outer Rails

1. Attach the short bracket to the outside of the long bracket. You must align the pins with the slides. Also, both bracket ends must face the same direction.

2. Adjust both the short and long brackets to the proper distance so that the rail fits snugly into the rack.

3. Secure the long bracket to the front side of the outer rail with two M5 screws and the short bracket to the rear side of the outer rail with three M5 screws.

4. Repeat steps 1-4 for the left outer rail.

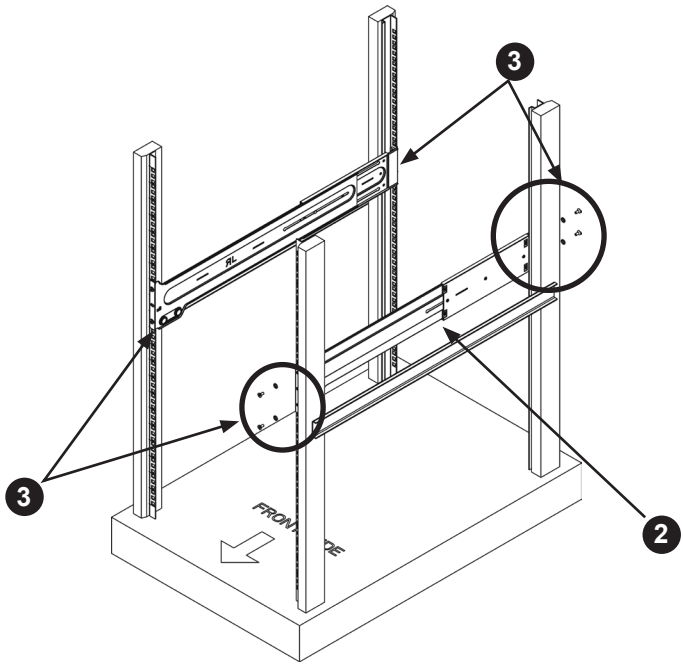

Figure 5-4: Installing the Outer Rails to the Server Rack

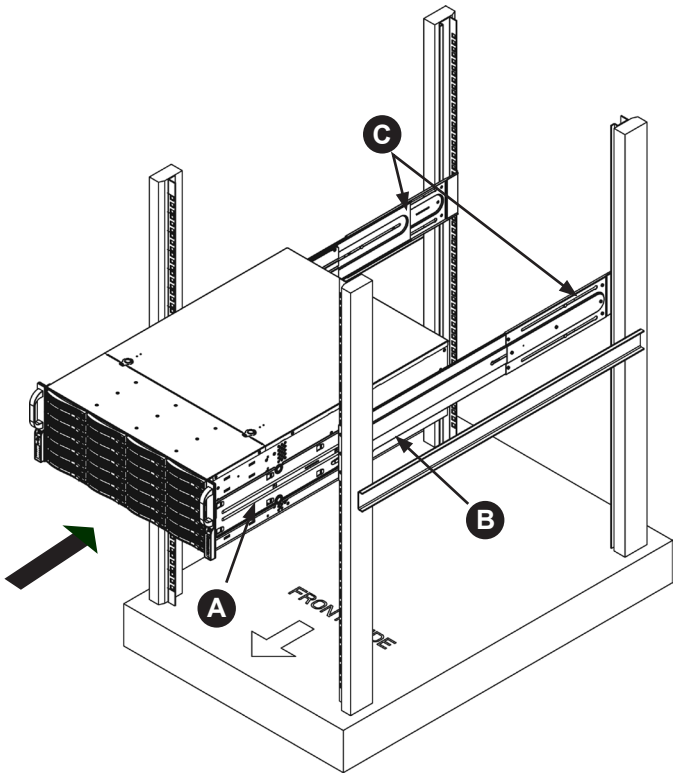

Figure 5-5: Installing the Rack Rails

Installing the Chassis onto a Rack

Installing the Chassis into a Rack:

1. Confirm that chassis includes the inner rails (A) and rail extensions (B). Also, confirm that the outer rails (C) are installed on the rack.

2. Line chassis rails (A and B) with the front of the rack rails (C).

3. Slide the chassis rails into the rack rails, keeping the pressure even on both sides (you may have to depress the locking tabs when inserting). When the server has been pushed completely into the rack, you should hear the locking tabs "click".

4. (Optional) Insert and tightening the thumbscrews that hold the front of the server to the rack.

Appendix A

SC846 Cables and Hardware

A-1 Overview

This appendix lists supported cables for your chassis system. It only includes the most commonly used components and configurations. For more compatible cables, refer to the manufacturer of the motherboard you are using and our Web site at: www.supermicro.com.

A-2 Cables Included with SC846TQ Chassis (SAS/SATA)

SC846TQ-R900			
Part #	**Type**	**Length**	**Description**
CBL-0157L	Cable	9"	8 pin to 8 pin ribbon cable for SGPIO, PB free
CBL-0087	Ribbon, Round	20"	16 pin to 16 pin ribbon cable for control panel
CBL-0160L-	Cable	6'	2 each, regional power cords
CBL-0180L	SATA	various	Set for 4 SATA cables. Length varied to minimize airflow interference.
CBL-0217L	Cable		16-pin control panel converter cable

SC846E1-R900B, SC846E2-R900B, SC846E1-R710B			
Part #	**Type**	**Length**	**Description**
CBL-0087	Ribbon, Round	20"	16 pin to 16 pin ribbon cable for control panel
CBL-0160L-	Cable	6'	2 each, regional power cords
CBL-0217L	Cable		16-pin control panel converter cable

A-3 Compatible Cables

These cables are compatible with the SC846 Chassis.

Alternate SAS/SATA Cables

Some compatible motherboards have different connectors. If your motherboard has only one SAS connector that the SAS/SATA cables must share, use one of the following cables. These cables must be purchased separately.

Cable Name: SAS Cable **Quantity:** 1

Part #: CBL-0175L
Alt. Name: "Big Four"

Description: This cable has one SFF-8484 (32 pin) connector on one end and 4 SAS connectors (7 pins each) at the other. This cable connects from the Host (motherboard or other controller) to the backplane SAS hard drive port.

Cable Name: SAS Cable **Quantity:** 1

Part #: CBL-0116
Alt. Name: iPass or "Small Four"

Description: This cable has one ipass (SFF-8087/mini-sas) connector (36 pins) at one end and 4 SAS connectors on one end. This cable connects from the Host (motherboard or other controller) to the backplane SAS hard drive port.

Extending Power Cables

Although Supermicro chassis are designed with to be efficient and cost-effective, some compatible motherboards have power connectors located in different areas.

To use these motherboards you may have to extend the power cables to the mother boards. To do this, use the following chart as a guide.

Power Cable Extenders		
Number of Pins	**Cable Part #**	**Length**
24 pin	CBL - 0042	7.9"(20 CM)
20 pin	CBL - 0059	7.9"(20 CM)
8 pin	CBL - 0062	7.9"(20 CM)
4 pin	CBL - 0060	7.9"(20 CM)

Front Panel to the Motherboard

The SC846 chassis includes a cable to connect the chassis front panel to the motherboard. If your motherboard uses a different connector, use the following list to find a compatible cable.

Front Panel to Motherboard Cable (Ribbon Cable)		
Number of Pins (Front Panel)	**Number of Pins (Motherboard**	**Cable Part #**
16 pin	16 pin	CBL - 0049
16 pin	20 pin	CBL - 0048
20 pin	20 pin	CBL - 0047
16 pin	various*	CBL - 0068
20 pin	various*	CBL - 0067

* Split cables: Use these cable if your motherboard requires several different connections from the front panel.

A-4 Chassis Screws

The accessory box includes all the screws needed to setup your chassis. This section lists and describes the most common screws used. Your chassis may not require all the parts listed.

M/B

Pan head
6-32 x 5 mm
[0.197]

HARD DRIVE

Flat head
6-32 x 5 mm
[0.197]

DVD-ROM, CD-ROM, and FLOPPY DRIVE

Pan head
6-32 x 5 mm
[0.197]

Flat head
6-32 x 5 mm
[0.197]

Round head
M3 x 5 mm
[0.197]

Round head
M2.6 x 5 mm
[0.197]

RAIL

Flat head
M4 x 4 mm
[0.157]

Round head
M4 x 4 mm
[0.157]

Flat head
M5 x 12 mm[0.472]
Washer for M5

M/B STANDOFFS

M/B standoff
6-32 to 6-32

M/B (CPU)
standoff
M5 to 6-32

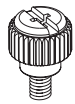

Thumb screw
6-32 x 5 mm
[0.197]

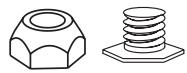

1/U M/B standoff
6-32 x 5 mm
[0.197]

Appendix B

SC846 Power Supply Specifications

This appendix lists power supply specifications for your chassis system.

SC846TQ-R900B, SC846E1-R900B and SC846E2-R900B	
	900W
MFR Part #	PWS-902-1R
Rated AC Voltage	100 - 240V 50 - 60Hz 3 - 4 Amp
+5V standby	4 Amp
+12V	75 Amp
+5V	50 Amp
+3.3V	30 Amp
-12V	0.6 Amp

SC846E1-R710B	
	710W
MFR Part #	PWS-711-1R
DC Input Voltage	Voltage Range = -36V to -75V (24A - 11A) Nominal Voltage = -48V
+5V standby	4 Amp
+12V	59 Amp
+5V	30 Amp
+3.3V	20 Amp
-12V	0.6 Amp

Notes

Appendix C

BPN-SAS-846TQ Backplane Specifications

To avoid personal injury and property damage, carefully follow all the safety steps listed below when accessing your system or handling the components.

C-1 ESD Safety Guidelines

Electriostatic Discharge (ESD) can damage electronic components. To prevent damage to your system, it is important to handle it very carefully. The following measures are generally sufficient to protect your equipment from ESD.

- Use a grounded wrist strap designed to prevent static discharge.
- Touch a grounded metal object before removing a component from the antistatic bag.
- Handle the RAID card by its edges only; do not touch its components, peripheral chips, memory modules or gold contacts.
- When handling chips or modules, avoid touching their pins.
- Put the card and peripherals back into their antistatic bags when not in use.

C-2 General Safety Guidelines

- Always disconnect power cables before installing or removing any components from the computer, including the backplane.
- Disconnect the power cable before installing or removing any cables from the backplane.
- Make sure that the backplane is securely and properly installed on the motherboard to prevent damage to the system due to power shortage.

C-3 A Note to Users

- All images and layouts shown in this user's guide are based upon the latest PCB Revision available at the time of publishing. The card you have received may or may not look exactly the same as the graphics shown in this manual.

Jumper Settings and Pin Definitions

C-4 Front Connectors and Jumpers

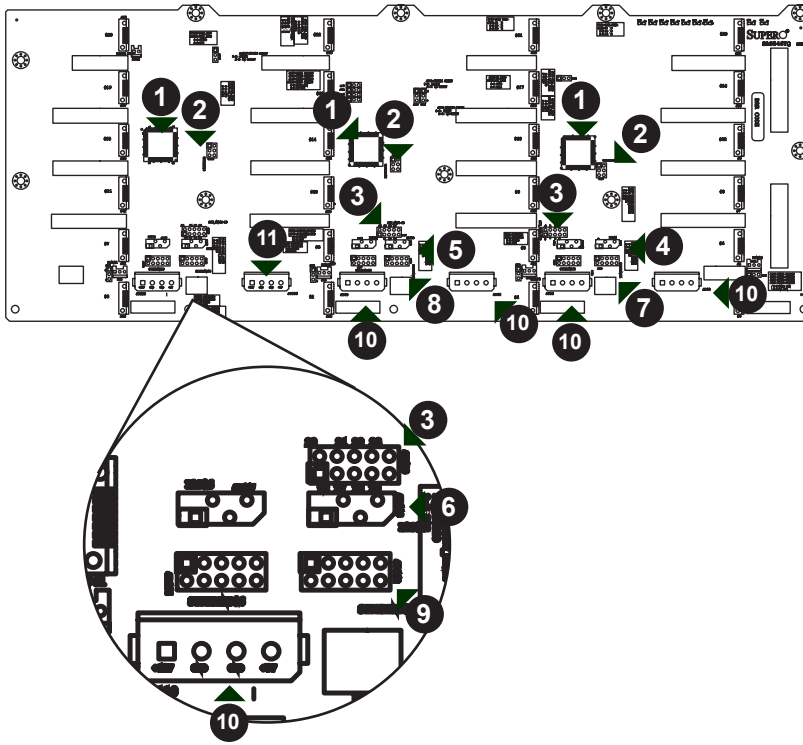

Figure C-1: Front Connectors

Front Connectors

1. Chip: MG 9072
2. Upgrade Connectors: JP69, JP78 and JP115
3. ACT_IN: JP26, JP47, and JP108
4. I²C Connector #1 (JP37) and #2 (JP95)
5. I²C Connector #3 (JP52) and #4 (JP96)
6. I²C Connector #5 (JP116) and #6 (JP117)
7. SideBand Connector #1 (JP66) and #2 (JP68)
8. SideBand Connector #3 (JP75) and #4 (JP77)
9. SideBand Connector #5 (JP112) and #6 (JP114)
10. Power Connectors (4-pin): JP10, JP13, JP46, JP48, JP109, and JP110

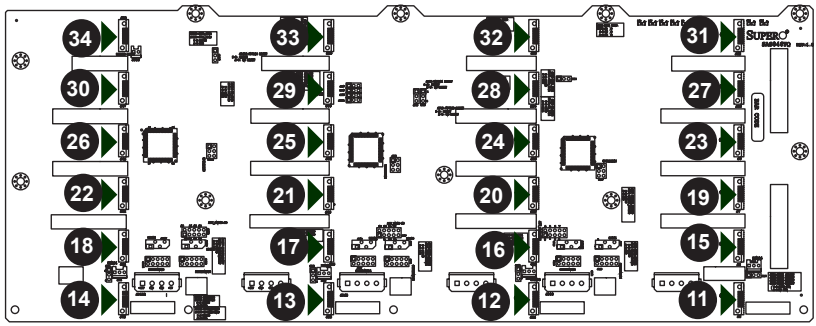

Figure C-2: SAS Ports

11. SAS Port #0 J5
12. SAS Port #1 J14
13. SAS Port #2 J26
14. SAS Port #3 J40
15. SAS Port #4 J6
16. SAS Port #5 J16
17. SAS Port #6 J29
18. SAS Port #7 J41
19. SAS Port #8 J7
20. SAS Port #9 J22
21. SAS Port #10 J30
22. SAS Port #11 J42
23. SAS Port #12 J8
24. SAS Port #13 J23
25. SAS Port #14 J32
26. SAS Port #15 J46
27. SAS Port #16 J10
28. SAS Port #17 J24
29. SAS Port #18 J38
30. SAS Port #19 J47
31. SAS Port #20 J12
32. SAS Port #21 J25
33. SAS Port #22 J39
34. SAS Port #23 J48

C-5 Front Connector and Pin Definitions

1. MG9072 Chip

The MG9072 is an enclosure management chip that supports the SES-2 controller and SES-2 protocols.

2. Upgrade Connectors

The upgrade connectors are designated JP69, JP78, and JP115 and are used for manufacturer's diagnostic purposes only.

3. Activity LED Header

The activity LED header, designated JP26, JP47 and JP108, is used to indicate the activity status of each SAS drive. The Activity LED Header is located on the front panel. For the Activity LED Header to work properly, connect using a 10-pin LED cable.

4./5./6. I²C Connectors

The I²C Connectors, designated JP37, JP95, JP52, JP96, JP116, and JP117, are used to monitor HDD activity and status. See the table on the right for pin definitions.

I²C Connector Pin Definitions (JP37, JP95, JP52, JP96, JP116, and JP117)

Pin#	Definition
1	Data
2	Ground
3	Clock
4	No Connection

7./8./9./ Sideband Headers

The sideband headers are designated JP66, JP68, JP75, JP77, JP112, and JP114. For SES-2 to work properly, you must connect an 8-pin sideband cable. See the table to the right for pin definitions.

NOTE: SGPIO is the default setting for this backplane.

Sideband Headers (JP66, JP68, JP75, JP77, JP112 and JP114)

Pin #	Definition	Pin #	Definition
2	**SGPIO:** SDIN **I²C:** Backplane Addressing (SB5)	1	Controller ID (SB6)
4	**SGPIO:** SDOUT **I²C:** Reset (SB4)	3	GND (SB2)
6	GND (SB3)	5	**SGPIO:** SLOAD **I²C:**SDA (SB1)
8	Backplane ID (SB7)	7	**SGPIO:** SCLOCK **I²C:**SCL (SB0)
10	No Connection	9	No Connection

10. Backplane Main Power Connectors

The 4-pin connectors, designated JP10, JP13, JP46, JP48, JP109, and JP110, provide power to the backplane. See the table on the right for pin definitions.

Backplane Main Power 4-Pin Connector (JP10, JP13, JP46, and JP48)

Pin#	Definition
1	+12V
2 and 3	Ground
4	+5V

11 - 34. SAS Ports

The SAS ports are used to connect the SAS drive cables. The 24 ports are designated #0 - #23. Each port is also compatible with SATA drives.

C-6 Front Jumper Locations and Pin Definitions

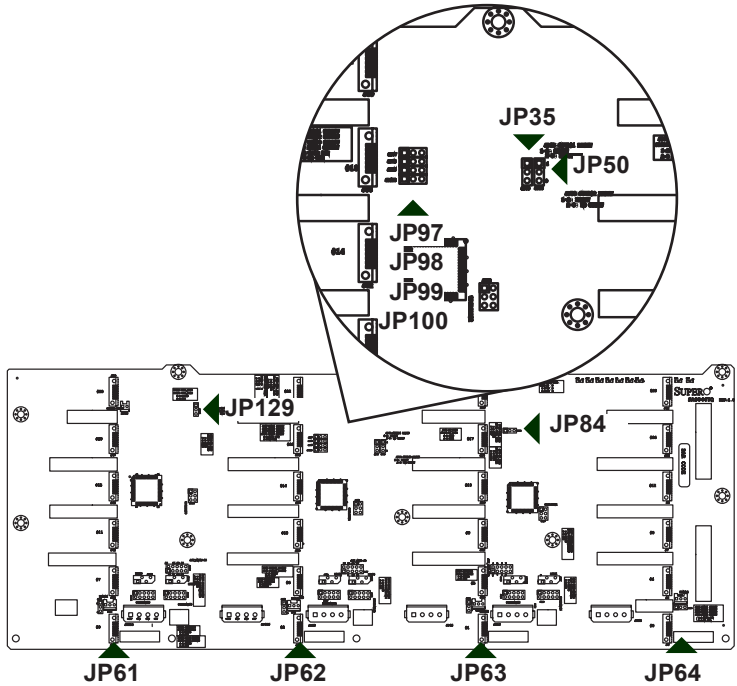

Figure C-3: Front Jumpers

Explanation of Jumpers

To modify the operation of the backplane, jumpers can be used to choose between optional settings. Jumpers create shorts between two pins to change the function of the connector. Pin 1 is identified with a square solder pad on the printed circuit board. Note: On two pin jumpers, "Closed" means the jumper is on and "Open" means the jumper is off the pins.

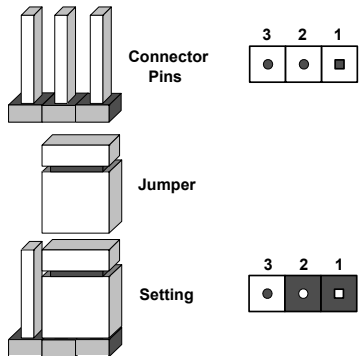

Jumper Settings		
Jumper	**Jumper Settings**	**Note**
JP35	1-2: Reset 2-3: Default	MG 9072 Chip Reset #1
JP50	1-2: Reset 2-3: Default	MG 9072 Chip Reset #2
JP129	1-2: Reset 2-3: Default	MG 9072 Chip Reset #3

Fan Jumper Settings

This backplane can use up to four fans. To utilize each fan, you must configure **both jumpers** as instructed below.

Fan Jumper Settings		
Jumper	**Jumper Settings**	**Note**
JP61	1-2:With Fan (Default) 2-3:No Fan	FAN#1
JP97	1-2:With Fan (Default) 2-3:No Fan	FAN#1
JP62	1-2:With Fan (Default) 2-3:No Fan	FAN#2
JP98	1-2:With Fan (Default) 2-3:No Fan	FAN#2
JP63	1-2:With Fan (Default) 2-3:No Fan	FAN#3
JP99	1-2:With Fan (Default) 2-3:No Fan	FAN#3
JP64	1-2:With Fan (Default) 2-3:No Fan	FAN#4
JP100	1-2:With Fan (Default) 2-3:No Fan	FAN#4

I²C and SGPIO Modes and Jumper Settings

This backplane can utilize I²C or SGPIO. SGPIO is the default mode and can be used without making changes to your jumper. The following information details which jumper must be configured to use SGPIO mode or restore your backplane to I²C mode.

SGPIO Setting (Default)		
Jumper	**Jumper Setting**	**Note**
JP84	1-2	SGPIO Mode Setting

I²C Setting		
Jumper	**Jumper Setting**	**Note**
JP84	2-3	I²C Setting

Front LED Indicators

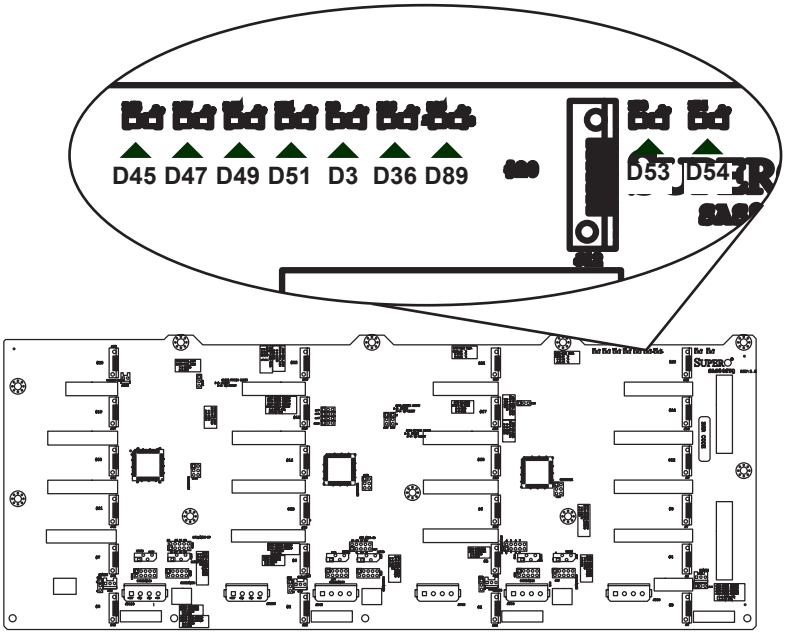

Figure C-4: Front LEDs

Front Panel LEDs		
LED	**State**	**Specification**
D45	ON	Failure in Fan #1
D47	ON	Failure in Fan #2
D49	ON	Failure in Fan #3
D51	ON	Failure in Fan #4
D3	ON	Alarm #1: Overheat/Drive Failure in Channel 1
D36	ON	Alarm #2: Overheat/Drive Failure in Channel 2
D89	ON	Alarm #3: Overheat/Drive Failure in Channel 3
D53	OFF	+5V : Backplane power failure. Light is on during normal operation.
D54	OFF	+12V : Backplane power failure. Light is on during normal operation.

C-7 Rear Connectors and LED Indicators

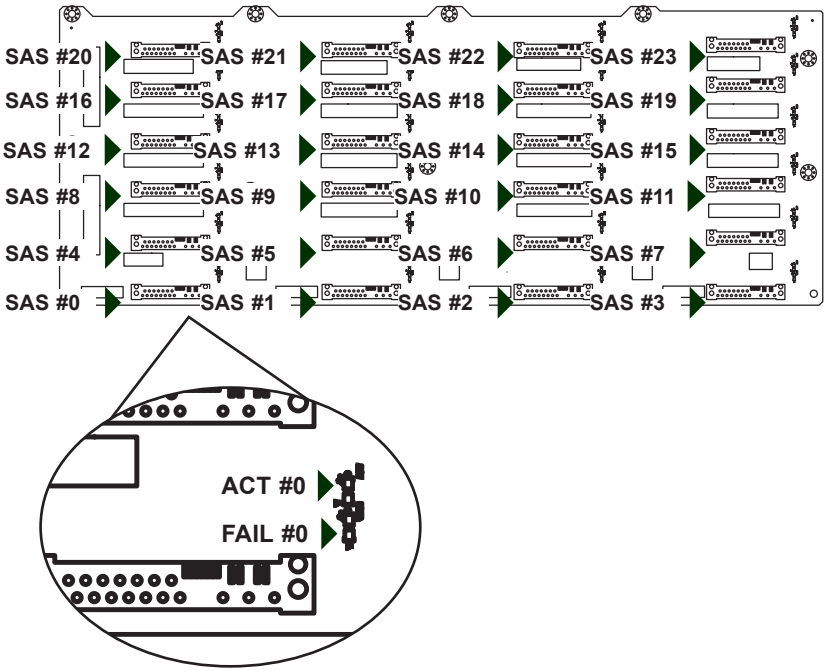

Figure C-5: Rear Connectors and LEDs

Rear SAS/SATA Connectors			
Rear Connector	**SAS Drive Number**	**Rear Connector**	**SAS Drive Number**
SAS #0	SAS/SATA HDD #0	SAS #12	SAS/SATA HDD #12
SAS #1	SAS/SATA HDD #1	SAS #13	SAS/SATA HDD #13
SAS #2	SAS/SATA HDD #2	SAS #14	SAS/SATA HDD #14
SAS #3	SAS/SATA HDD #3	SAS #15	SAS/SATA HDD #15
SAS #4	SAS/SATA HDD #4	SAS #16	SAS/SATA HDD #16
SAS #5	SAS/SATA HDD #5	SAS #17	SAS/SATA HDD #17
SAS #6	SAS/SATA HDD #6	SAS #18	SAS/SATA HDD #18
SAS #7	SAS/SATA HDD #7	SAS #19	SAS/SATA HDD #19
SAS #8	SAS/SATA HDD #8	SAS #20	SAS/SATA HDD #20
SAS #9	SAS/SATA HDD #9	SAS #21	SAS/SATA HDD #21
SAS #10	SAS/SATA HDD #10	SAS #22	SAS/SATA HDD #22
SAS #11	SAS/SATA HDD #11	SAS #23	SAS/SATA HDD #23

Rear LED Indicators

Rear LED Indicators		
Rear LED	**Hard Drive Activity**	**Failure LED**
SAS #0	D12	D5
SAS #1	D22	D23
SAS #2	D40	D37
SAS #3	D102	D107
SAS #4	D13	D6
SAS #5	D24	D29
SAS #6	D41	D38
SAS #7	D104	D108
SAS #8	D14	D7
SAS #9	D25	D30
SAS #10	D42	D39
SAS #11	D106	D109
SAS #12	D15	D8
SAS #13	D26	D31
SAS #14	D87	D88
SAS #15	D111	D110
SAS #16	D18	D19
SAS #17	D27	D32
SAS #18	D100	D103
SAS #19	D118	D119
SAS #20	D21	D20
SAS #21	D28	D33
SAS #22	D101	D105
SAS #23	D120	D121

Appendix D
BPN-SAS-846EL Backplane Specifications

Safety Guidelines

To avoid personal injury and property damage, carefully follow all the safety steps listed below when accessing your system or handling the components.

D-1 ESD Safety Guidelines

Electriostatic Discharge (ESD) can damage electronic components. To prevent damage to your system, it is important to handle it very carefully. The following measures are generally sufficient to protect your equipment from ESD.

- Use a grounded wrist strap designed to prevent static discharge.
- Touch a grounded metal object before removing a component from the antistatic bag.
- Handle the RAID card by its edges only; do not touch its components, peripheral chips, memory modules or gold contacts.
- When handling chips or modules, avoid touching their pins.
- Put the card and peripherals back into their antistatic bags when not in use.

D-2 General Safety Guidelines

- Always disconnect power cables before installing or removing any components from the computer, including the backplane.
- Disconnect the power cable before installing or removing any cables from the backplane.
- Make sure that the backplane is securely and properly installed on the motherboard to prevent damage to the system due to power shortage.

D-3 An Important Note to Users

- All images and layouts shown in this user's guide are based upon the latest PCB Revision available at the time of publishing. The card you have received may or may not look exactly the same as the graphics shown in this manual.

Jumper Settings and Pin Definitions

D-4 Front Connectors and Jumpers

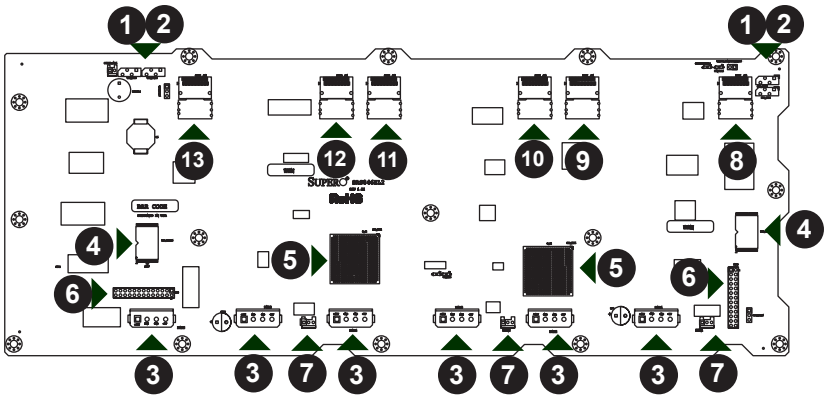

Figure D-1: Front Connectors

Front Connectors

1. and 2. Primary and Secondary I^2C connectors (optional)
3. Power Connectors: PWR1, PWR2, PWR3, PWR4, PWR5, and PWR6
4. Primary and Secondary Flash Chip
5. Primary and Secondary Expander Chip
6. EPP Connectors: J24 and J25
7. Fan Connectors: Fan1, Fan2, and Fan3
8. SAS Connectors: PRI_J0
9. SAS Connectors: PRI_J1
10. SAS Connectors: PRI_J2
11. SAS Connectors: SEC_J0 (not available in EL1 single port backplanes)
12. SAS Connectors: SEC_J1 (not available in EL1 single port backplanes)
13. SAS Connectors: SEC_J2 (not available in EL1 single port backplanes)

D-5 Front Connector and Pin Definitions

1 and 2. Primary and Secondary I²C Connectors

The I²C Connectors are used to monitor HDD activity and status. See the table on the right for pin definitions.

I²C Connector Pin Definitions (JP44 and JP45)	
Pin#	Definition
1	Data
2	Ground
3	Clock
4	No Connection

3. Backplane Main Power Connectors

The 4-pin connectors, designated PWR1, PWR2, PWR3, PWR4, PWR5, and PWR6, provide power to the backplane. See the table on the right for pin definitions.

Backplane Main Power 4-Pin Connector	
Pin#	Definition
1	+12V
2 and 3	Ground
4	+5V

4. Primary and Secondary Flash Chips

The Primary and Secondary Flash Chips enhance the backplane memory.

5. Primary and Secondary Expander Chips

This Primary and Secondary Expander Chips allow the backplane to support dual ports, cascading, and failover.

6. EPP Ports

The EPP ports are used for manufacturer diagnostic purposes only.

7. Fan Connectors

The 3-pin connectors, designated FAN1, FAN2, and FAN3, provide power to the fans. See the table on the right for pin definitions.

Fan Connectors	
Pin#	Definition
1	Ground
2	+12V
3	Tachometer

8 - 13. SAS Ports

The Primary and Secondary sets of SAS ports provide expander features including cascading and failover From right to left the ports are Primary 1/2/3 and Secondary 1/2/3.

D-6 Front Jumper Locations and Pin Definitions

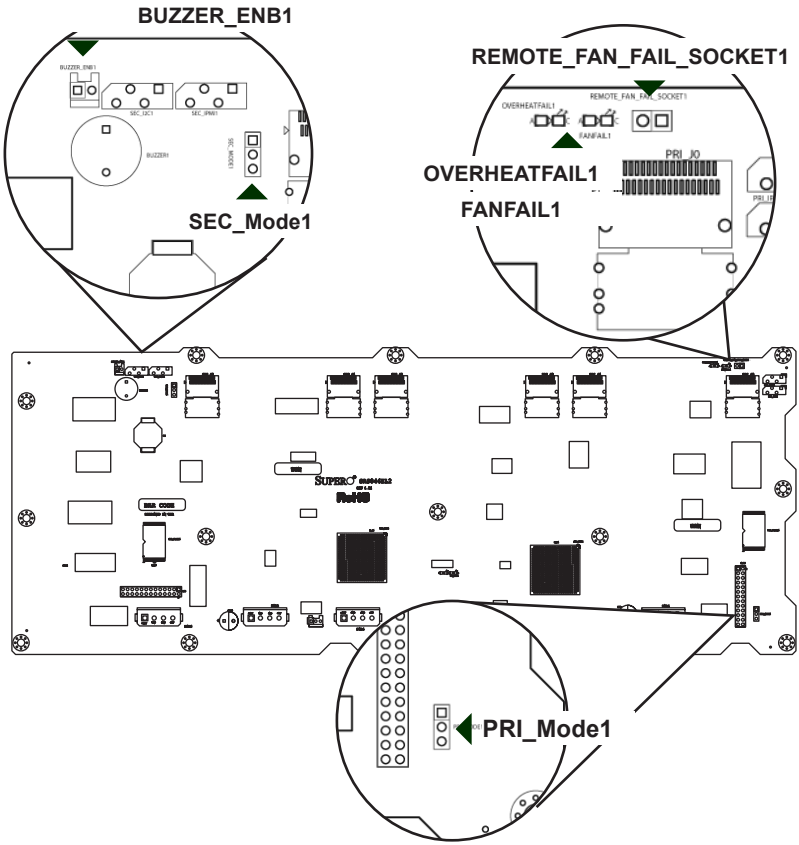

Figure D-2: Front Jumper Locations and Pin Defimitions

Explanation of Jumpers

To modify the operation of the backplane, jumpers can be used to choose between optional settings. Jumpers create shorts between two pins to change the function of the connector. Pin 1 is identified with a square solder pad on the printed circuit board. Note: On two pin jumpers, "Closed" means the jumper is on and "Open" means the jumper is off the pins.

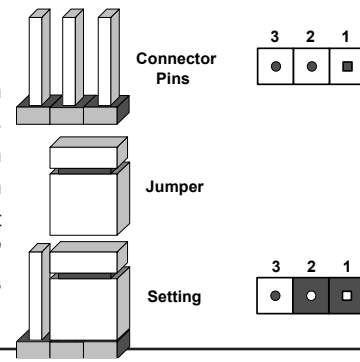

General Jumper Settings		
Jumper	**Jumper Settings**	**Note**
PRI_MODE1	1-2	Factory Setting Do not change
SEC_MODE1	1-2	Factory Setting Do not change
BUZZER_ENB1	Open: Disable Closed: Enable	Buzzer Enable

Socket Settings		
Socket	**Socket Setting**	**Note**
REMOTE_FAN_FAIL_ SOCKET	Connected	Front Panel Fan Fail indicator (Optional)

Front Panel LEDs		
LED	**State**	**Specification**
OVERHEATFAIL1	ON	Overheat/Drive Failure LED Indicator (Red light: flashing, Buzzer: On)
FANFAIL1	ON	Failure in Fan #1

D-7 Rear Connectors and LED Indicators

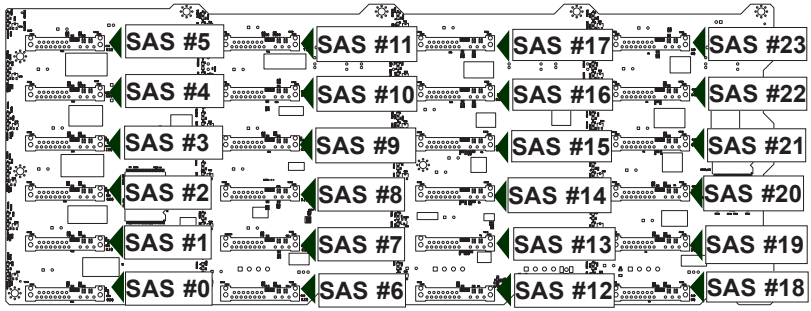

Figure D-3: Rear Connectors

Rear SAS/SATA Connectors			
Rear Connector	**SAS Drive Number**	**Rear Connector**	**SAS Drive Number**
SAS #0	SAS/SATA HDD #0	SAS #12	SAS/SATA HDD #12
SAS #1	SAS/SATA HDD #1	SAS #13	SAS/SATA HDD #13
SAS #2	SAS/SATA HDD #2	SAS #14	SAS/SATA HDD #14
SAS #3	SAS/SATA HDD #3	SAS #15	SAS/SATA HDD #15
SAS #4	SAS/SATA HDD #4	SAS #16	SAS/SATA HDD #16
SAS #5	SAS/SATA HDD #5	SAS #17	SAS/SATA HDD #17
SAS #6	SAS/SATA HDD #6	SAS #18	SAS/SATA HDD #18
SAS #7	SAS/SATA HDD #7	SAS #19	SAS/SATA HDD #19
SAS #8	SAS/SATA HDD #8	SAS #20	SAS/SATA HDD #20
SAS #9	SAS/SATA HDD #9	SAS #21	SAS/SATA HDD #21
SAS #10	SAS/SATA HDD #10	SAS #22	SAS/SATA HDD #22
SAS #11	SAS/SATA HDD #11	SAS #23	SAS/SATA HDD #23

Rear LED Indicators		
Rear LED	**Hard Drive Activity**	**Failure LED**
SAS #0	ACT #0	FAIL #0
SAS #1	ACT #1	FAIL #1
SAS #2	ACT #2	FAIL #2
SAS #3	ACT #3	FAIL #3
SAS #4	ACT #4	FAIL #4
SAS #5	ACT #5	FAIL #5
SAS #6	ACT #6	FAIL #6
SAS #7	ACT #7	FAIL #7
SAS #8	ACT #8	FAIL #8
SAS #9	ACT #9	FAIL #9
SAS #10	ACT #10	FAIL #10
SAS #11	ACT #11	FAIL #11
SAS #12	ACT #12	FAIL #12
SAS #13	ACT #13	FAIL #13
SAS #14	ACT #14	FAIL #14
SAS #15	ACT #15	FAIL #15
SAS #16	ACT #16	FAIL #16
SAS #17	ACT #17	FAIL #17
SAS #18	ACT #18	FAIL #18
SAS #19	ACT #19	FAIL #19
SAS #20	ACT #20	FAIL #20
SAS #21	ACT #21	FAIL #21
SAS #22	ACT #22	FAIL #22
SAS #23	ACT #23	FAIL #23

Dual Port and Cascading Configurations

D-8 Single and Dual Port Expanders

Single Ports

SAS-846EL1 backplanes have a single-port expander that access all 24 drives and supports cascading.

Dual Ports

SAS-846EL2 backplanes have dual-port expanders that access all 24 drives. These dual-port expanders support cascading, failover, and recovery.

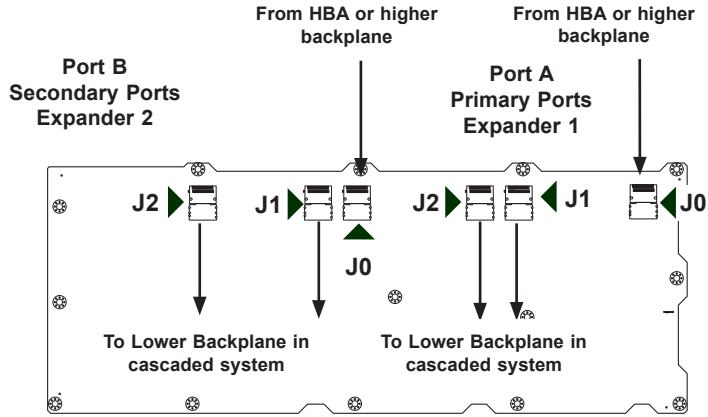

Figure D-4: SAS-846EL2 Dual Port Configuration

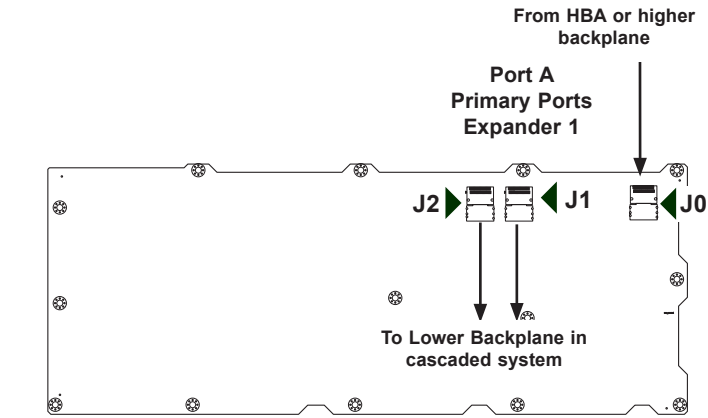

Figure D-5: SAS-846EL1 Single Port Configuration

D-9 Failover

The SAS-846EL2 backplane has two expanders which allow effective failover and recovery.

Single Host Bus Adapter

In a single host bus configuration, the backplane connects to one Host Bus Adapter (HBA).

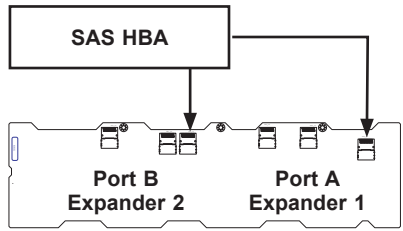

Figure D-6: Single HBA

Single Host Bus Adapter Failover

If the Expander or data path in Port A fails, the system automatically switches to Port B.

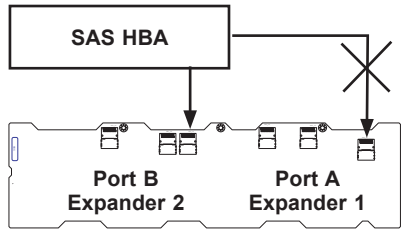

Figure D-7: Single HBA Failover

Dual Host Bus Adapter

In a Dual Host Bus Configuration, the backplane connects to two Host Bus Adapters (HBA).

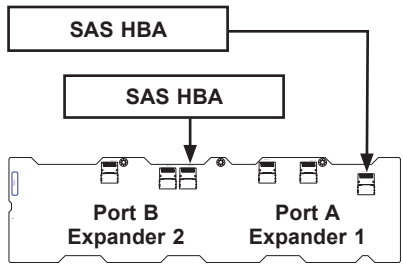

Figure D-8: Dual HBA

Dual Host Bus Adapter Failover

If the Expander or data path in Port A fails, the system automatically switches to Port B. This maintains a full connection to all drives.

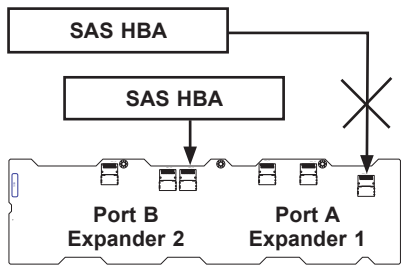

Figure D-9: Dual HBA Failover

D-10 Chassis Power Card and Support Cables

Chassis Power Card

In a cascaded configuration, the first chassis includes a motherboard and at least one Host Bus Adapter (HBA). Other servers in this enclosed system, include a power card. This section describes the supported power card for the SAS-846 series backplane.

For more information, see the PCC-JBPWR2 power card manual. This manual can be found at the http://www.supermicro.com or as an appendix in the SAS-846EL chassis manual.

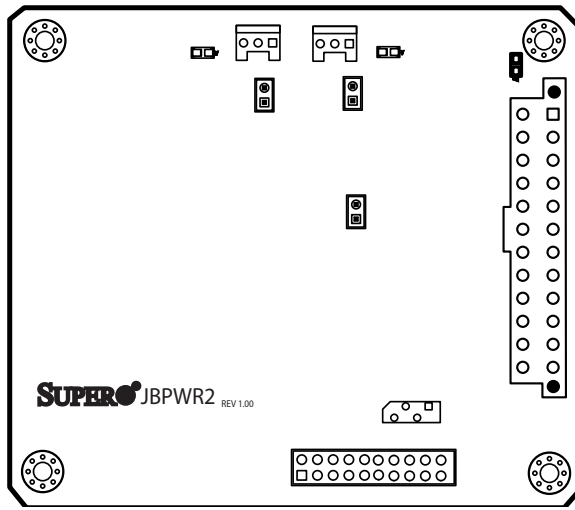

Figure D-10: Chassis Power Card (Sold Separately)

Power Card		
Part Number	**Part Type**	**Where Used**
CSE-PTJBOD-CB1	Power Card	Allows the chassis to be in a JBOD (Just a Bunch of Drives) system.

Connecting an Internal Host Bus Adapter to the Backplane

The following section lists the most common cables used to connect the Host Bus Adapter (HBA) to the backplane.

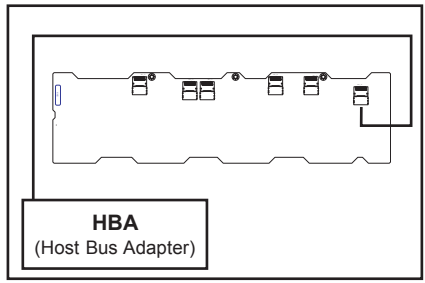

Figure D-11: Single Internal Host Bus Adapter

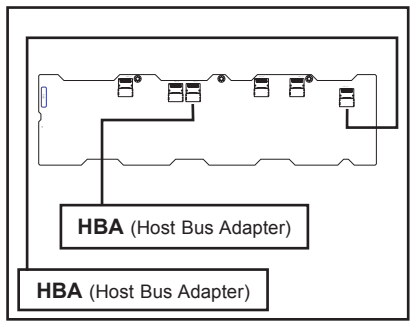

Figure D-12: Dual Internal Host Bus Adapter

Supported Internal HBA Cables

Use the following listed cables to create connections between the internal HBA and SAS-846EL backplane. The cables required depend on the HBA connector.

Cable Name: IPASS TO 4-LANE

Part #: CBL-0117L **Length:** 46 cm (18 inches)

Description: This cable has one SFF-8484 (32 pin) connector on one end and ipass (SFF-8087/mini-sas) connector (36 pins) at the other. This cable connects from the HBA to the SAS-846EL backplane.

Cable Name: IPASS (mini SAS) TO IPASS (mini SAS)

Part #: CBL-0108L-02	**Length:** 39 cm (15 inches)
Part #: CBL-0109L-02	**Length:** 22 cm (9 inches)
Part #: CBL-0110L-02	**Length:** 18 cm (7 inches)

Description: This cable has an ipass (SFF-8087/mini-sas) connector (36 pins) at each end. It connects from the HBA to the SAS-846EL backplane.

Connecting an External Host Bus Adapter to the Backplane

This backplane supports external Host Bus Adapters. In this configuration, the HBA and the backplane are in different physical chassis. This allows a JBOD (Just a Bunch Of Drives) configuration from an existing system.

Single External Host Bus Adapter

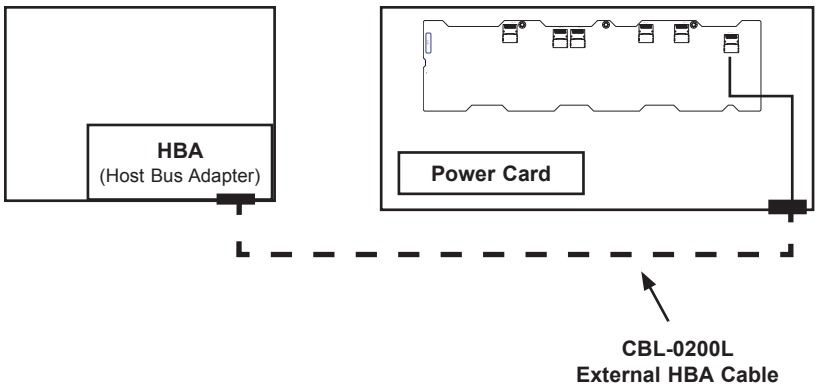

Figure D-12: Single External Host Adapter

Dual External Host Bus Adapter

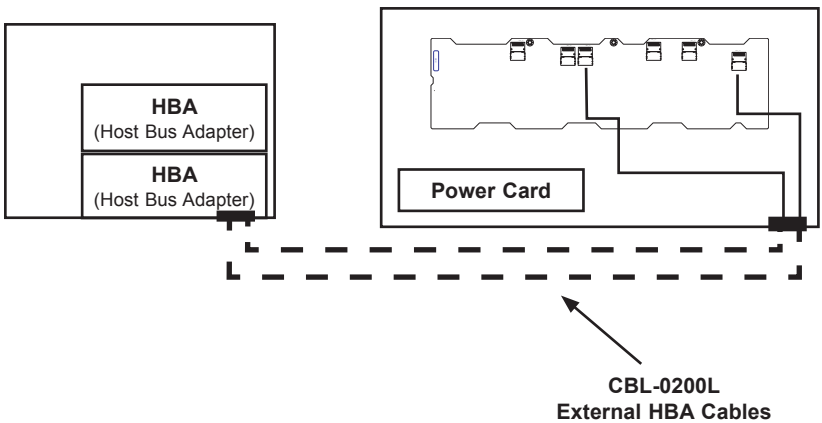

Figure D-13: Dual External Host Bus Adapter

Supported External HBA to Backplane Cable

Use the following cable if your external HBA has an InfiniBand connector.

Figure D-14: SAS InfiniBand Cable (CBL-0200L)

Cable Name: SAS InfiniBand to Mini SAS X4 1M cable, PBF

Part #: CBL-0200L **Length:** 1 meter

Description: This cable has an InfiniBand connector (SFF-8470) on one end and an SFF-8088-1X (26-pins) at the other end.

Connecting Multiple Backplanes in a Single Channel Environment

This section describes the cables used when cascading from a single HBA. These connections use CBL-0167L internal cables and CBL-0166L external cables.

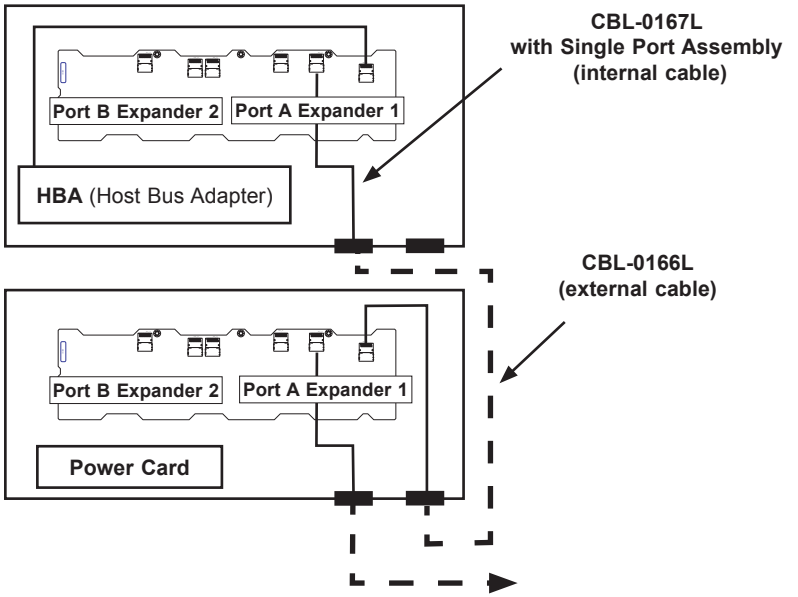

Figure D-15: Single HBA Configuration

Single HBA Configuration Cables

Single Port Cable Assembly

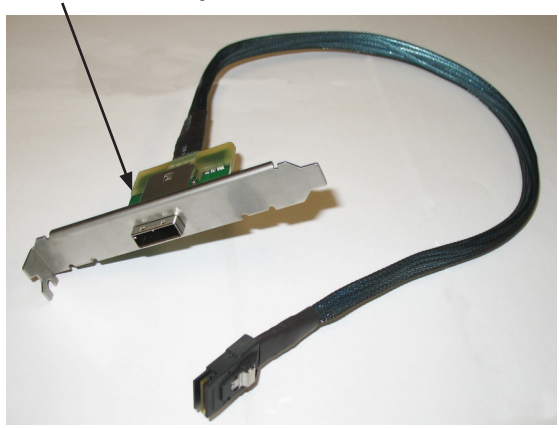

Figure D-16: Single Port Internal Cable (CBL-0167L)

Cable Name: SAS EL2/EL1 Backplane Cable (Internal) with 2-port Cascading Cable, 68 cm

Part #: CBL-0167L (SFF-8087 to SFF-8088 x1)
Ports: Single
Placement: Internal cable

Description: Internal cable. Connects the backplane to the Host Bus Adapter (HBA) or external port. Used in single port environments.

Figure D-17: External Cable (CBL-0166L)

Cable Name: SAS EL2/EL1 Cascading Cable (External), 68cm

Part #: CBL-0166L (SFF-8088 1x to SFF-8088 x1)
Ports: Single or Dual
Placement: External cable

Description: External cascading cable. Connects ports between servers. With most connectors, use one cable for single port connections and two cables for dual port connections.

Connecting Multiple Backplanes in a Dual Channel Environment

This section describes the cables used when cascading from dual HBAs. These connections use CBL-0168L internal cables and CBL-0166L external cables.

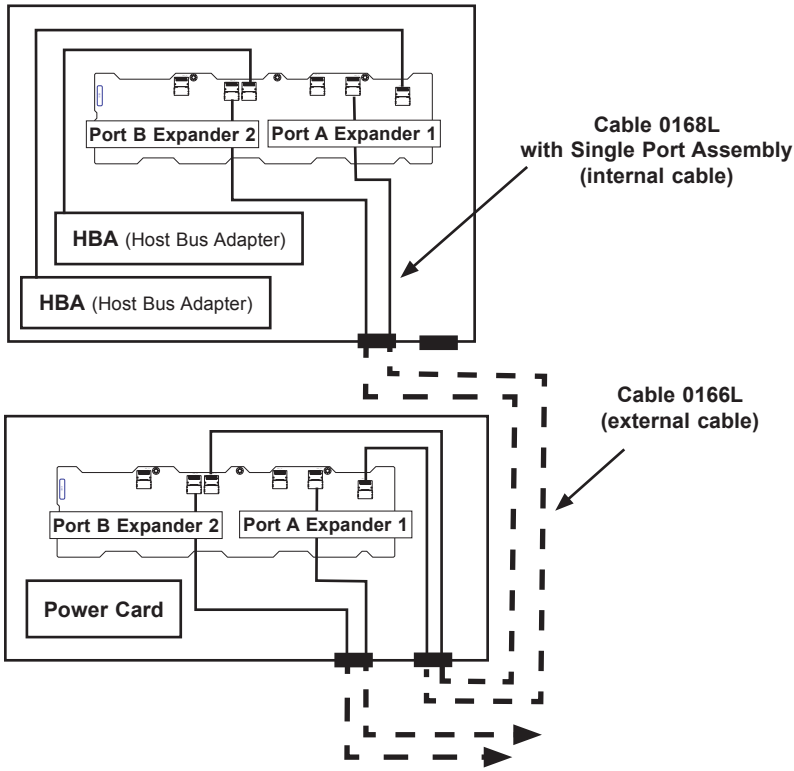

Figure D-18: Dual HBA Configuration

Dual HBA Configuration Cables

Figure D-19: Dual Port Internal Cable (CBL-0168L)

Cable Name: SAS Dual-port Cable Assembly, 68/76cm

Part #: CBL-0168L **Placement:** Internal cable
Ports: Dual

Description: Internal cascading cable. Connects the backplane to the Host Bus Adapter (HBA) or external port. Used in dual port environments.

Figure D-20: External Cable (CBL-0166L)

Cable Name: SAS EL2/EL1 Cascading Cable (External), 68cm

Part #: CBL-0166L **Placement:** External cable
Ports: Single or Dual

Description: External cascading cable. Connects ports between servers. Use one cable for single port connections and two cables for dual port connections.

D-11 Supported Cascading Configurations

Cascading allows the system to access data at a faster rate by allowing several backplanes to share resources to reduce latency time.

The first backplane in a cascaded system requires a motherboard and HBA. Other servers require a power control card with no motherboard and no HBA. For more information, see the SC846 Chassis Manual available at www.supermicro.com.

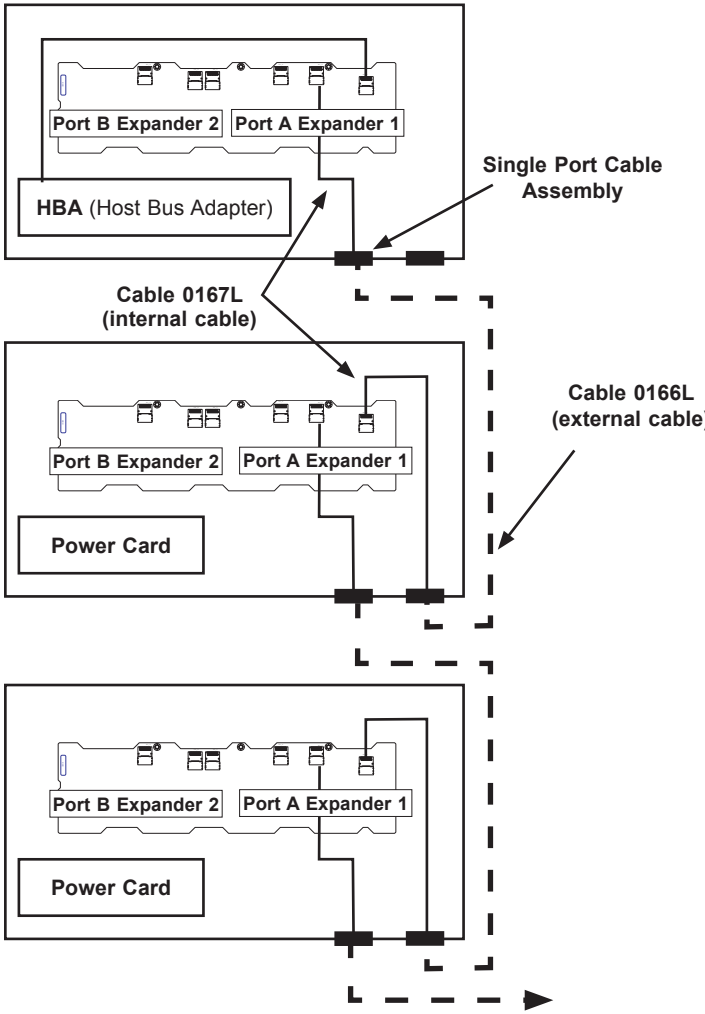

FigureD-21: Simple Cascaded Configuration

Server System with Single SAS HBA

The expanders allow horizontal branching. This configuration also applies to dual ports.

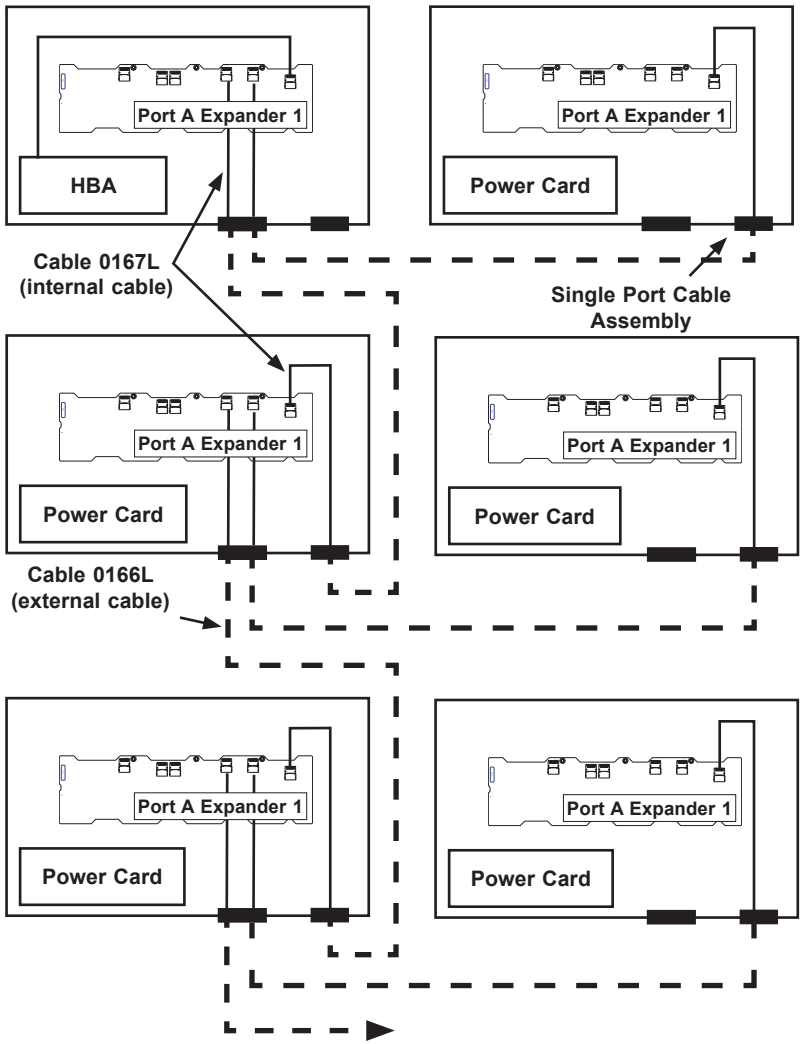

Figure D-22: Cascaded Configuration with Horizontal Branching

Dual SAS HBA and Cascaded Configuration

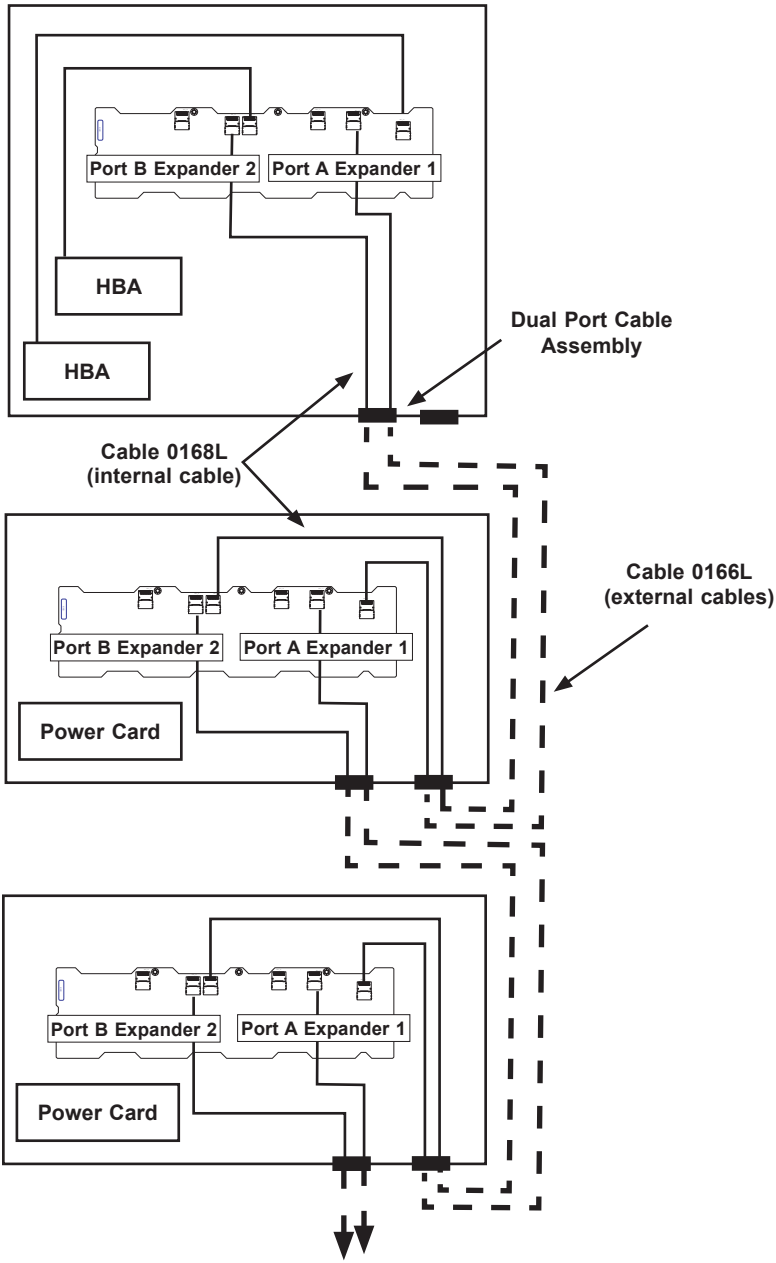

Figure D-23: Dual SAS HBA with Cascaded Configuration

Dual SAS HBA and Cascaded Configuration with Branching

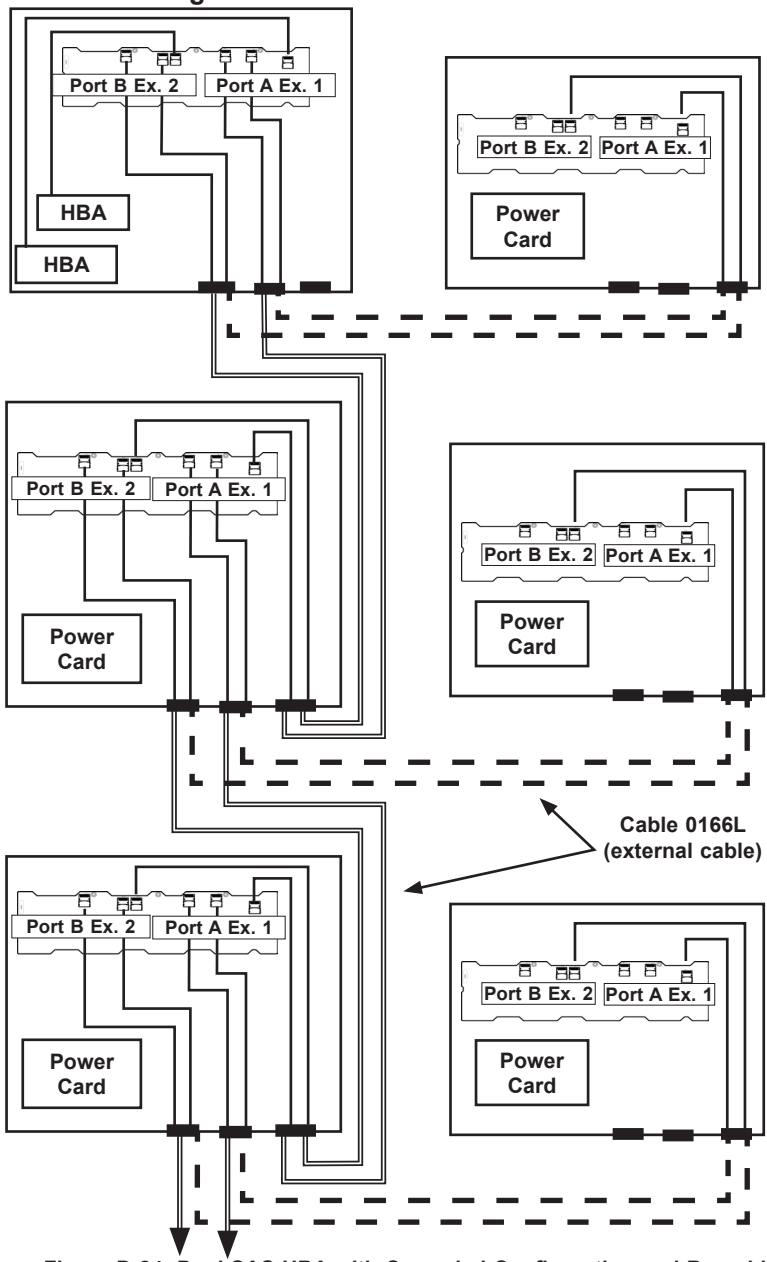

Figure D-24: Dual SAS HBA with Cascaded Configuration and Branching

Disclaimer (cont.)

The products sold by Supermicro are not intended for and will not be used in life support systems, medical equipment, nuclear facilities or systems, aircraft, aircraft devices, aircraft/emergency communication devices or other critical systems whose failure to perform be reasonably expected to result in significant injury or loss of life or catastrophic property damage. Accordingly, Supermicro disclaims any and all liability, and should buyer use or sell such products for use in such ultra-hazardous applications, it does so entirely at its own risk. Furthermore, buyer agrees to fully indemnify, defend and hold Supermicro harmless for and against any and all claims, demands, actions, litigation, and proceedings of any kind arising out of or related to such ultra-hazardous use or sale.